TECHNICAL CATALOGUE

B & C

QUALITY SYSTEM CERTIFICATION ISO 9001 DNV

THRU DRIVE
HYDRAULIC VANE PUMPS

TQ/TV series

THRU-DRIVE HYDRAULIC VANE PUMPS "TQ/TV" SERIES

Thru-drive pumps save installation space and cost by eliminating double shaft extension electric motors or by reducing the number of motors and drive couplings.
Furthermore thru-drive models provide valuable circuit design flexibility, such as having the vane pump coupled with other types of pumps, both fixed and variable displacement, on a single input drive.
The B&C thru-drive pumps are available in TQ and TV versions.
The ten vane TQ type is particularly suitable for applications subject to sudden peaks of pressure, while the twelve vane TV model is specifically designed to meet very low noise requirements.
The table below shows the main technical characteristics of both TQ and TV versions. More detailed technical information is available on the catalogues of the standard BQ and BV pumps.

Technical characteristics

oil viscosity: 25 c.St. (10W), temperature: 45°C, inlet pressure: 0 BAR

Pump type	Geometric displacement		Rated capacity at 1200 rpm 7 bar		TQ series			TV series		
					Maximum pressure with mineral oil		Max speed	Maximum pressure with mineral oil		Max speed
	cm^3/g	(in^3/r)	l/min	(gpm)	bar	(psi)	rpm	bar	(psi)	rpm
02	40,1	(2.45)	46,9	(12)	210	(3050)	2700	175	(2538)	1800
	45,4	(2.77)	52,7	(14)	210	(3050)	2700	175	(2538)	1800
	55,2	(3.37)	64,2	(17)	210	(3050)	2500	175	(2538)	1800
	60,0	(3.66)	71,0	(19)	210	(3050)	2500	175	(2538)	1800
	67,5	(4.12)	79,0	(21)	210	(3050)	2500	175	(2538)	1800
04	69,0	(4.2)	79,5	(21)	210	(3050)	2500	175	(2538)	1800
	81,6	(5)	94,0	(25)	210	(3050)	2500	175	(2538)	1800
	97,7	(6)	113,8	(30)	210	(3050)	2500	175	(2538)	1800
	112,7	(6.9)	131,6	(35)	210	(3050)	2400	175	(2538)	1800
	121,6	(7.4)	139,9	(38)	210	(3050)	2400	175	(2538)	1800
05	138,6	(8.46)	164	(42)	175	(2538)	2200	175	(2538)	1800
	153,5	(9.4)	180	(47)	175	(2538)	2200	175	(2538)	1800
	162,2	(9.9)	189	(50)	175	(2538)	2200	175	(2538)	1800
	183,4	(11.2)	217	(57)	175	(2538)	2200	175	(2538)	1800
	193,4	(11.8)	230	(60)	175	(2538)	2200	175	(2538)	1800

contents

Single pumps TQ02..... pag. 3

Single pumps TQ04..... pag. 8

Single pumps TQ05..... pag. 13

Single pumps TV02..... pag. 18

Single pumps TV04..... pag. 23

Single pumps TV05..... pag. 28

Operating instructions..... pag. 33

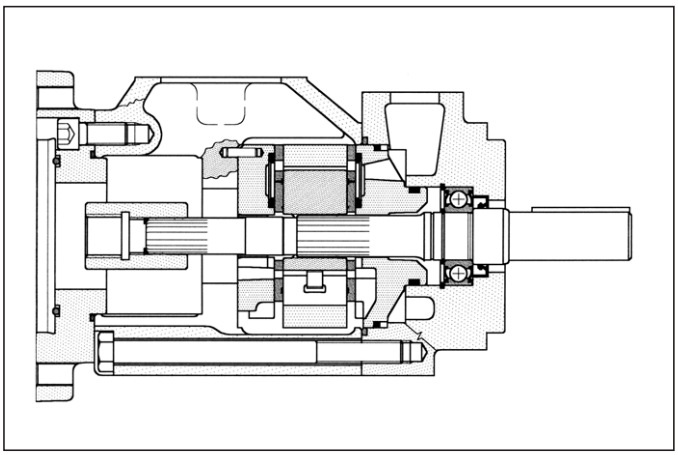

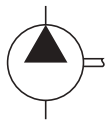

General description

Fixed displacement vane pump, hydraulically balanced, with capacity determined by the type of cartridge used and the speed of rotation. The pump is available in five different displacements from 47 to 79 L/min (from 12 to 21 gpm) at 1200 rpm and 7 bar.

Technical characteristics

Cartridge model	Geometric displacement		Rated capacity at 1000 rpm 7 bar		Rated capacity at 1200 rpm 7 bar		Rated capacity at 1500 rpm 7 bar		Maximum pressure with mineral oil		Speed range rpm	
	cm³/g	(in³/r)	l/min	(gpm)	l/min	(gpm)	l/min	(gpm)	bar	(psi)	min	max
A02-12	40,1	(2.45)	39,1	(10.0)	46,9	(12)	58,8	(15.5)	210	(3050)	600	2700
A02-14	45,4	(2.77)	43,9	(11.7)	52,7	(14)	65,7	(17.4)	210	(3050)	600	2700
A02-17	55,2	(3.37)	53,5	(14.2)	64,2	(17)	80,2	(21.2)	210	(3050)	600	2500
A02-19	60,1	(3.66)	59,2	(15.8)	71,1	(19)	88,7	(23.4)	210	(3050)	600	2500
A02-21	67,5	(4.12)	65,8	(17.5)	79,3	(21)	99,8	(26.4)	210	(3050)	600	2500

For detailed technical informations please refer to BQ Series catalogue

Hydraulic fluids: mineral oils, phosphate ester based fluids.

Viscosity range *(with mineral oil)*: from 13 to 860 cSt. *(13 to 54 cSt. recommended)*.

Filtration: for the inlet - 149 micron abs., for the return line - 25 micron abs. or better *(with synthetic fluids: for the return line - 10 micron abs. or better)*.

Inlet pressure: *(with mineral oil)*: from -0,17 to +1,4 bar *(-2.5 to + 20 psi)*

Operating temperature: with mineral oil -10°C +70°C *(+30°C to +60°C recommended)*.

Drive: direct and coaxial by means of a flexible coupling.

Main operating data

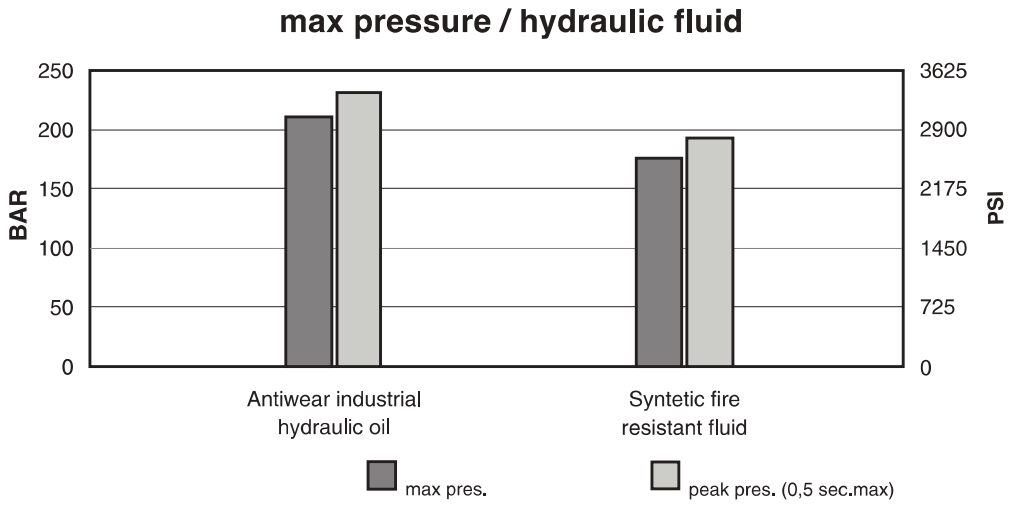

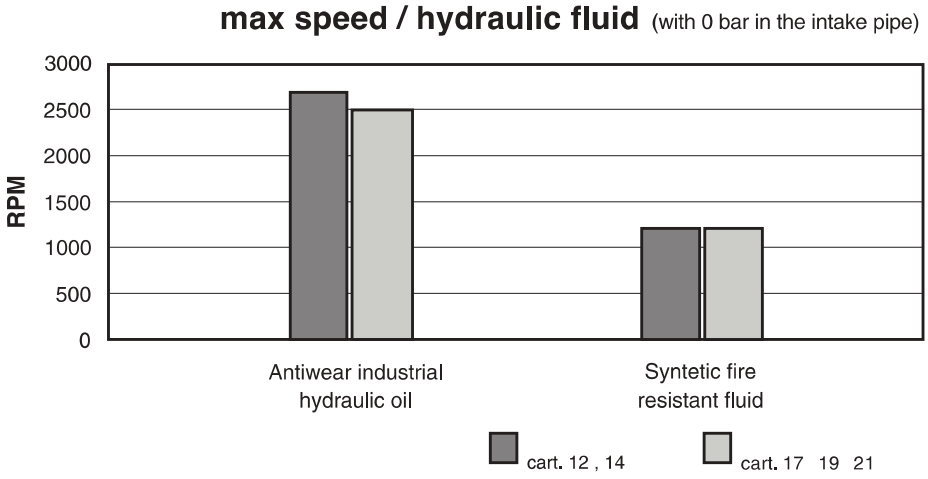

If the intake pressure is not zero bar, use the graph below to find the percentage correction factor to apply to the maximum speed.

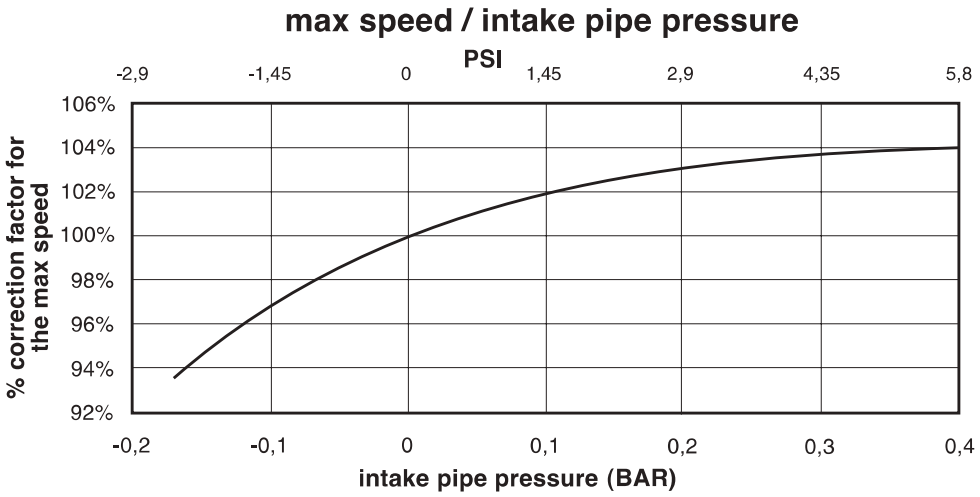

Installation dimensions mm (inches)

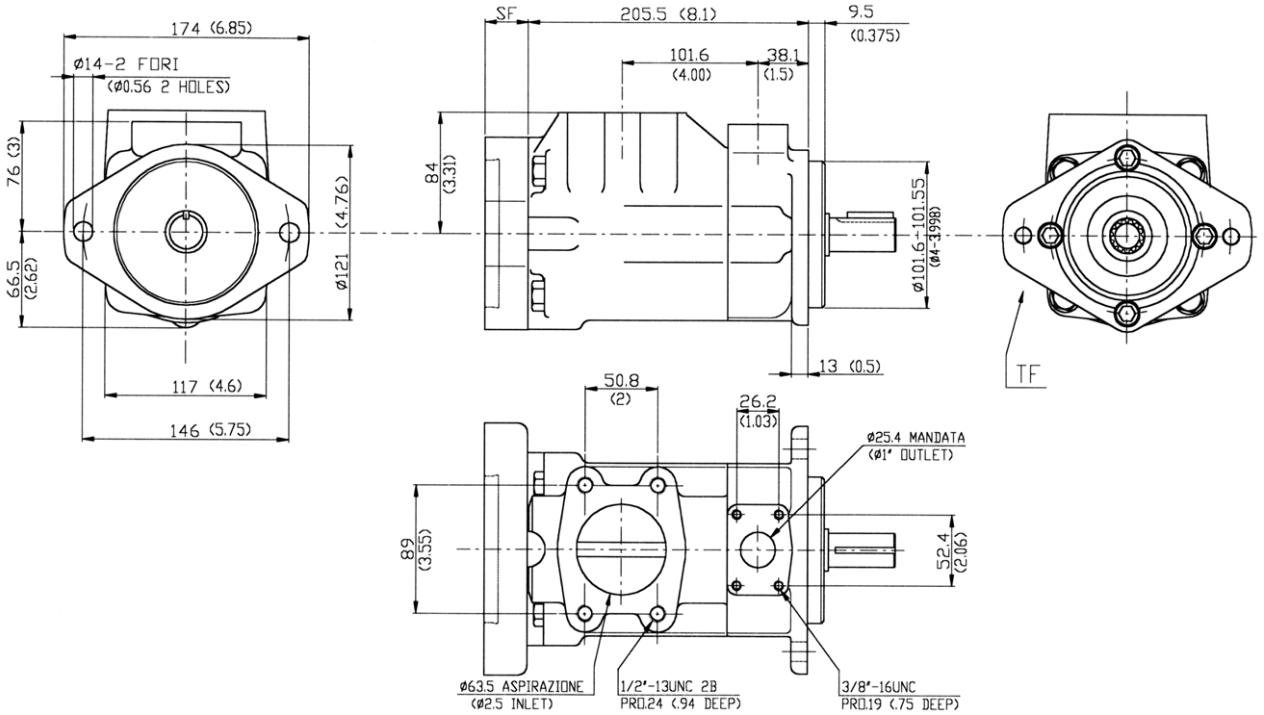

Approx. weight: 19,4 kg. (43 lbs.)

Rear mountings mm (inches)

Different types of coupling with other pumps are also available. Please contact our Technical Dept. for detailed information.

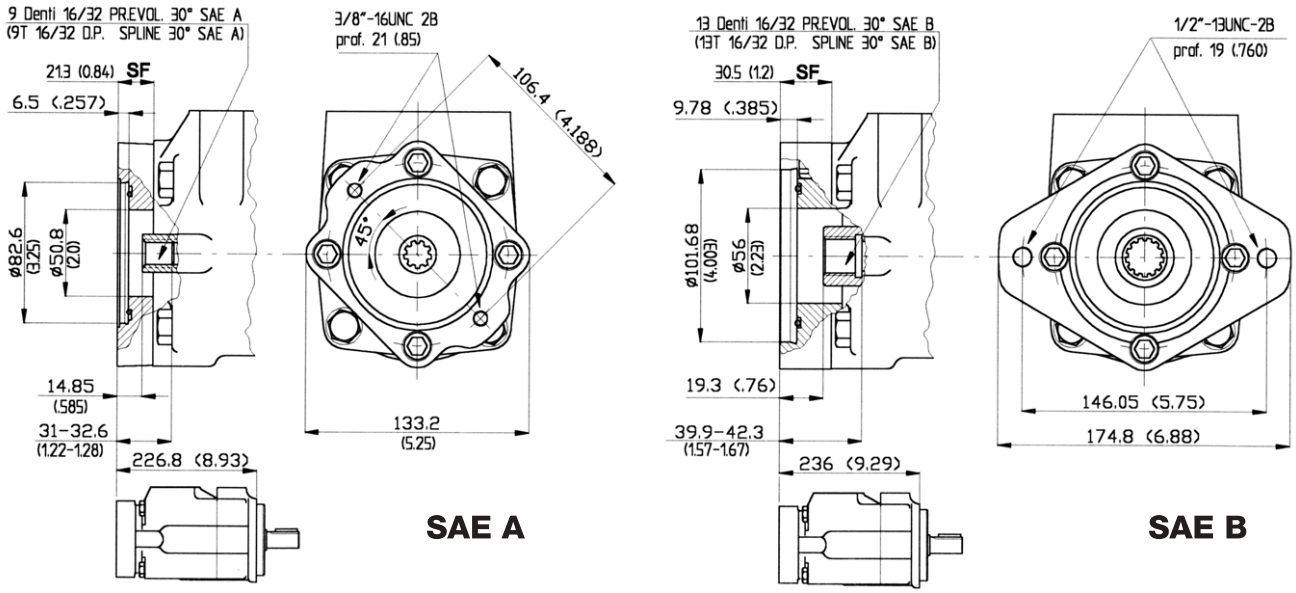

Model code breakdown

TQ 02 * * * * * * * * (L) (*)

Pump series

Pump type

Rear mounting
A = SAE A, **B** = SAE B

Cartridge type
12 14 17 19 21

Outlet port positions
(outlet viewed from adapter side)
A = Outlet opposite end
B = Outlet 90° CCW from inlet
C = Outlet in line with inlet
D = Outlet 90° CW from inlet

Shaft options
203 = Straight with key
297 = Splined

Seals
(omit with standard seals and one shaft seal in NBR)
V = seal and shaft-seal in FPM (Viton®)
D = standard seals and double shaft-seals in NBR
F = seals and double shaft-seals in FPM (Viton®)

Rotation
(viewed from shaft end)
L = left hand rotation CCW (omit if CW)

Adapter orientation
(viewed from adapter side)
SAE A
A = Rotate 45° CW with respect to pump mounting flange
B = Rotate 45° CCW with respect to pump mounting flange
SAE B
A = In line with pump mounting flange
B = Rotate 90° with respect to pump mounting flange

Shaft options mm (inches)

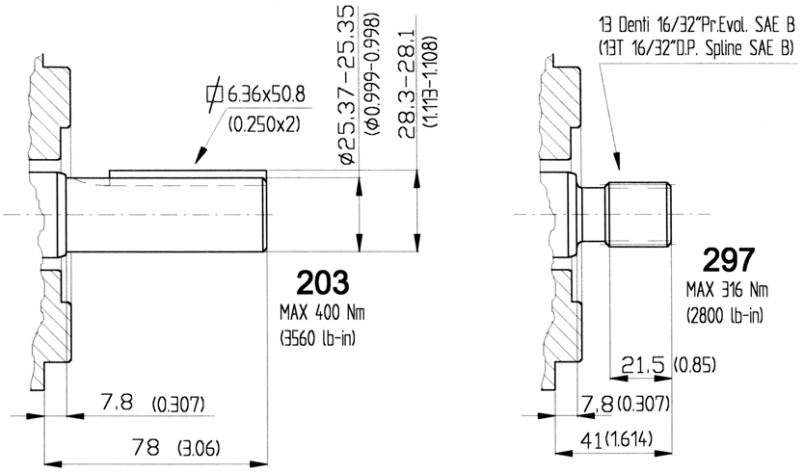

Adapter plate orientations

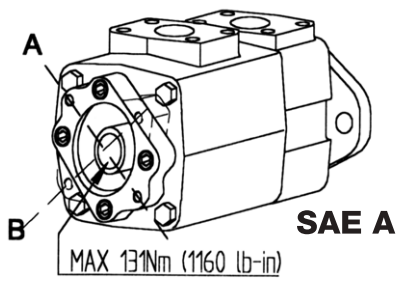

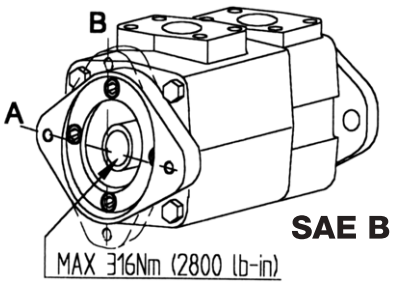

PORT ORIENTATIONS

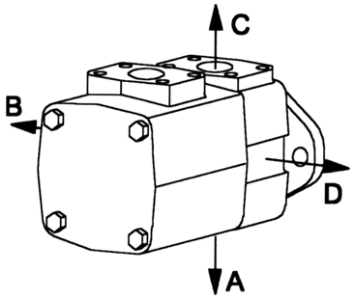

Id. codes of pump components

Model	Coupling	Seeger	Coupling kit (seeger+coupling)
TQ02B	M7002000	M7061170	M7012000
TQ02A	M7001000	M7061160	M7011000

Cartridge			
Series	Model	PART NO.	PUMP ROTAT.
A02	12	A0212030	right hand
	14	A0214070	
	17	A0217110	
	19	A0219150	
	21	A0221190	
A02	12	A0212040	left hand
	14	A0214080	
	17	A0217120	
	19	A0219160	
	21	A0221200	

Pump	Model	Kit	Shaft	Key
TQ02A	203	M7021203	K0270203	M8028600
TQ02A	297	M7021297	K0290297	-
TQ02B	203	M7022203	K0271203	M8028600
TQ02B	297	M7022297	K0291297	-

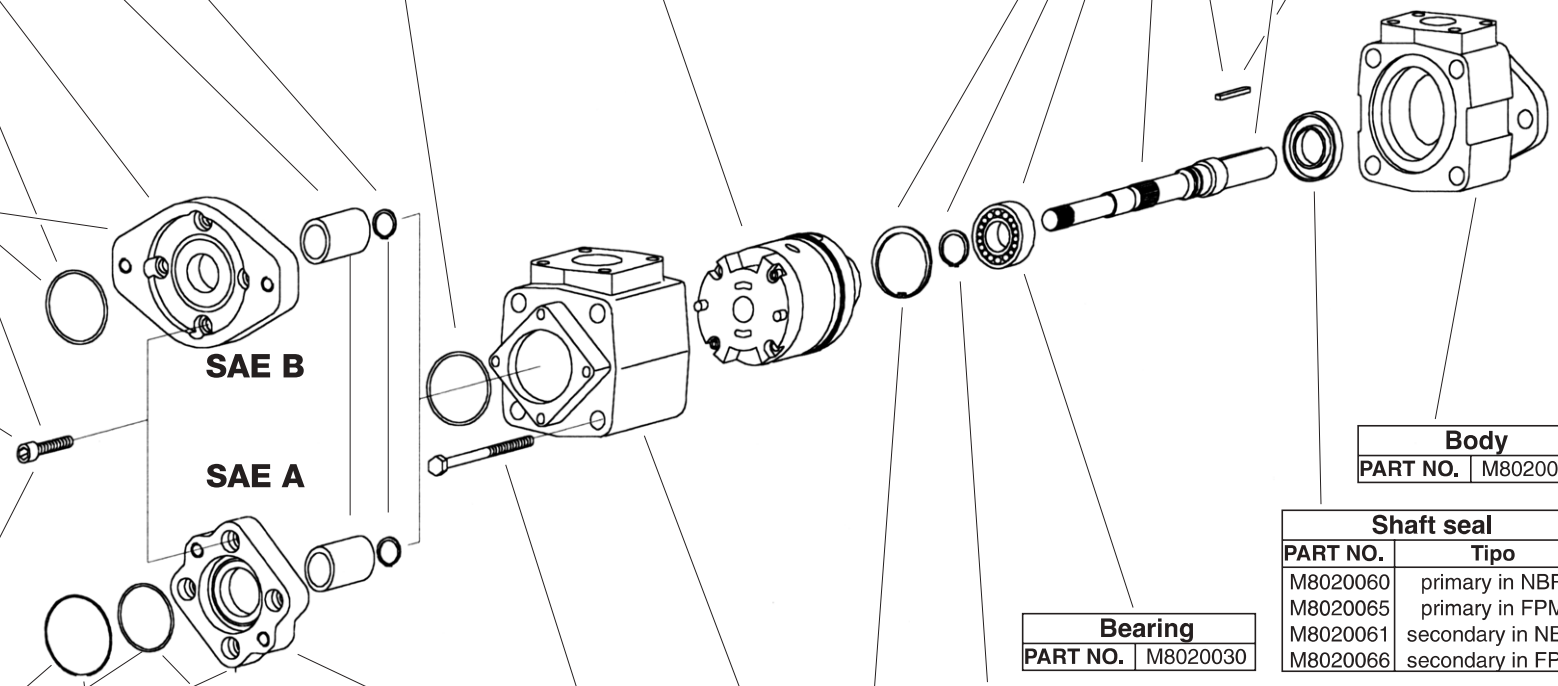

✶ "O" ring	
PART NO.	M7061050

Adapter plate	
PART NO.	M8060200

✶ "O" ring	
PART NO.	M7061070

Adapter kit	
PART NO.	M7060200

Screw	
PART NO.	M7061010
Torque at 70 Nm (624 lb. in.)	

Adapter kit	
PART NO.	M7060100

✶ "O" ring	
PART NO.	M7061110

✶ "O" ring	
PART NO.	M7061060

Adapter plate	
PART NO.	M8060100

Screw	
PART NO.	M8020130
Torque at 102 Nm (910 lb. in.)	

Inlet body	
PART NO.	M8020110

Seeger	
PART NO.	M8020040

Seeger	
PART NO.	M8020050

Bearing	
PART NO.	M8020030

Shaft seal	
PART NO.	Tipo
M8020060	primary in NBR
M8020065	primary in FPM
M8020061	secondary in NBR
M8020066	secondary in FPM

Body	
PART NO.	M8020010

✶ Adapter seal kit

Model	PART NO.	Type
TQ02A	M7065100	NBR
TQ02B	M7065200	NBR
TQ02A	M7065150	FPM
TQ02B	M7065250	FPM

For "Pump seal kit" part no. refer to BQ Series technical catalogue

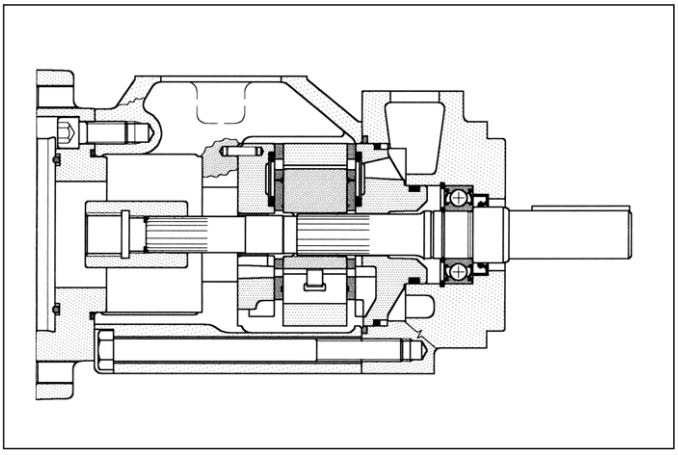

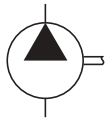

General description

Fixed displacement vane pump, hydraulically balanced, with capacity determined by the type of cartridge used and the speed of rotation. The pump is available in five different displacements from 80 to 140 l/min *(from 21 to 38 gpm)* at 1200 rpm and 7 bar.

Technical characteristics

Cartridge model	Geometric displacement		Rated capacity at 1000 rpm 7 bar		Rated capacity at 1200 rpm 7 bar		Rated capacity at 1500 rpm 7 bar		Maximum pressure with mineral oil		Speed range rpm	
	cm³/g	(in³/r)	l/min	(gpm)	l/min	(gpm)	l/min	(gpm)	bar	(psi)	min	max
A04-21	69,0	(4.2)	66,3	(17,5)	79,5	(21)	101,4	(26.8)	210	(3050)	600	2500
A04-25	81,6	(5)	78,3	(20.8)	94,0	(25)	120,1	(31.7)	210	(3050)	600	2500
A04-30	97,7	(6)	94,8	(25.0)	113,8	(30)	141,2	(37.3)	210	(3050)	600	2500
A04-35	112,7	(6.9)	109,7	(29.2)	131,6	(35)	167,2	(44.1)	210	(3050)	600	2400
A04-38	121,6	(7.4)	116,6	(31.7)	139,9	(38)	177,3	(46.8)	210	(3050)	600	2400

For detailed technical informations please refer to BQ Series catalogue

Hydraulic fluids: mineral oils, phosphate ester based fluids.

Viscosity range *(with mineral oil)*: from 13 to 860 cSt. *(13 to 54 cSt. recommended)*.

Filtration: for the inlet - 149 micron abs., for the return line - 25 micron abs. or better *(with synthetic fluids: for the return line - 10 micron abs. or better)*.

Inlet pressure: *(with mineral oil)*: from -0,17 to +1,4 bar *(-2.5 to + 20 psi)*

Operating temperature: with mineral oil -10°C +70°C *(+30°C to +60°C recommended)*.

Drive: direct and coaxial by means of a flexible coupling.

Main operating data

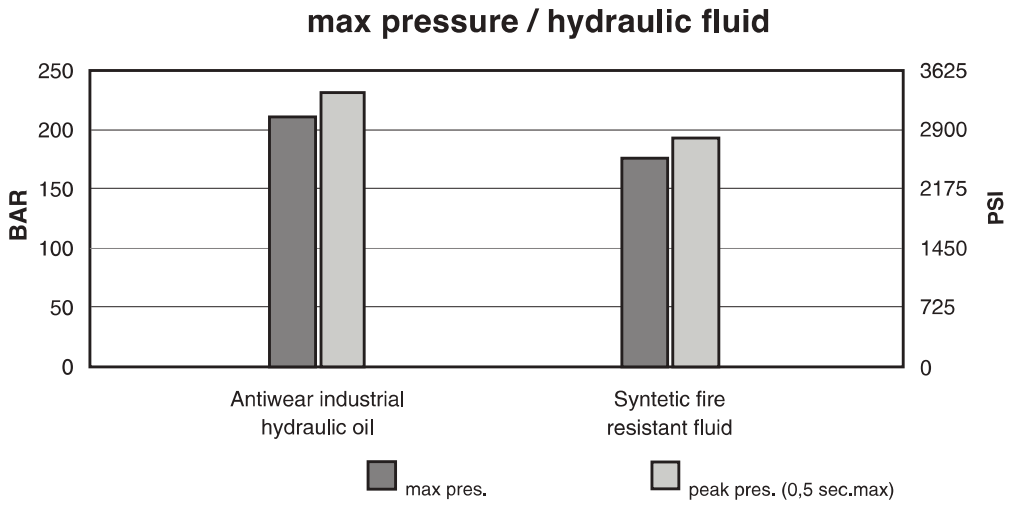

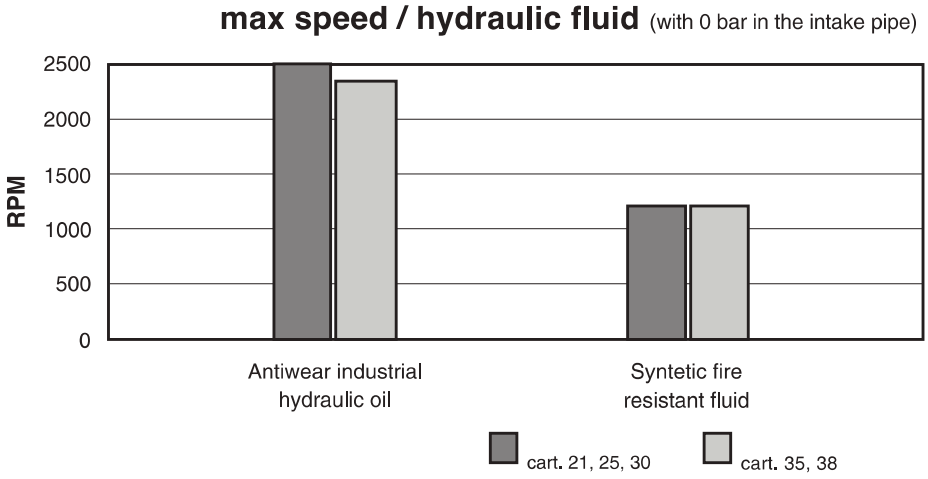

If the intake pressure is not zero bar, use the graph below to find the percentage correction factor to apply to the maximum speed.

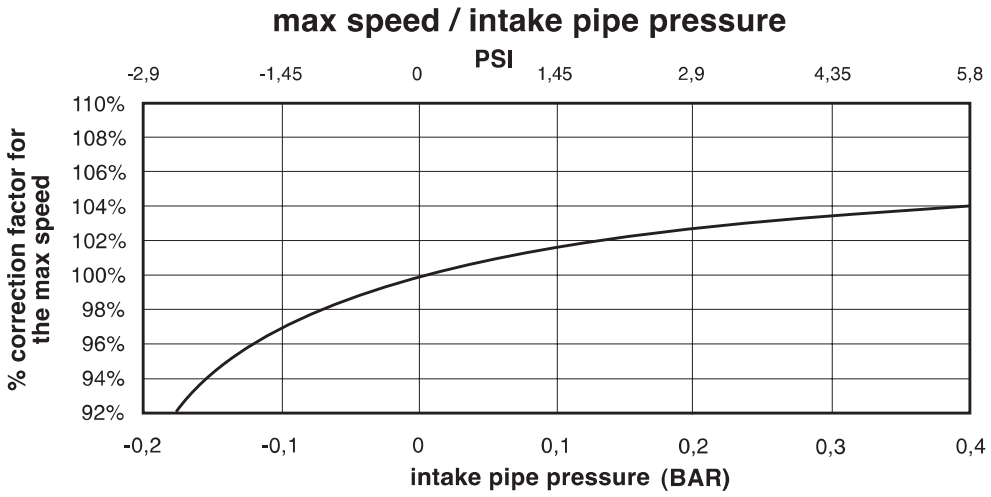

Installation dimensions mm (inches)

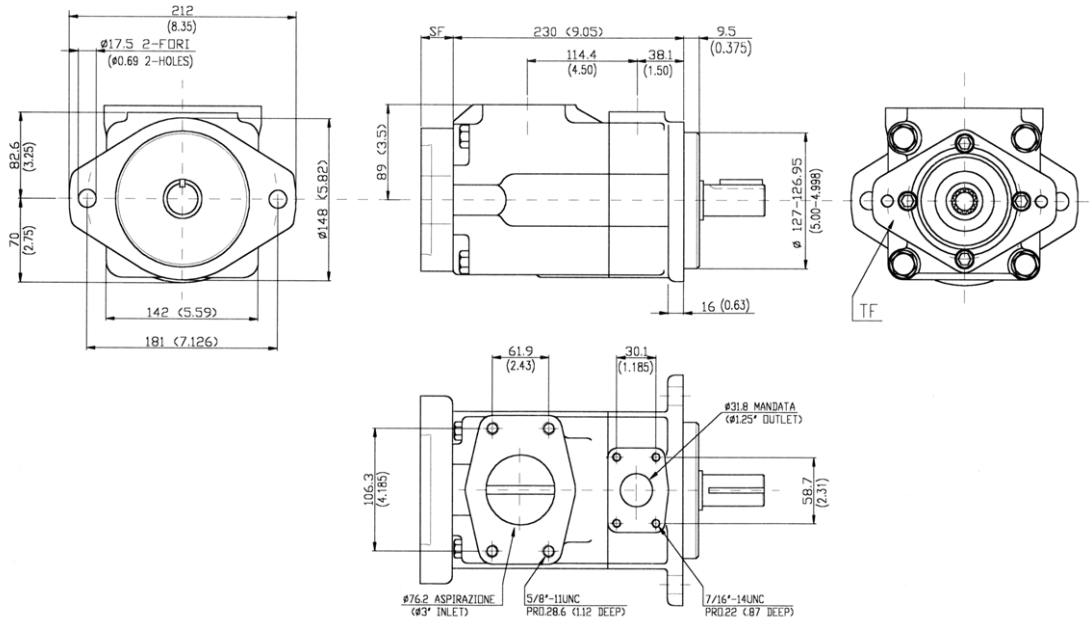

Approx. weight: 28,7 kg. (63 lbs.)

Rear mountings mm (inches)

Different types of coupling with other pumps are also available. Please contact our Technical Dept. for detailed information.

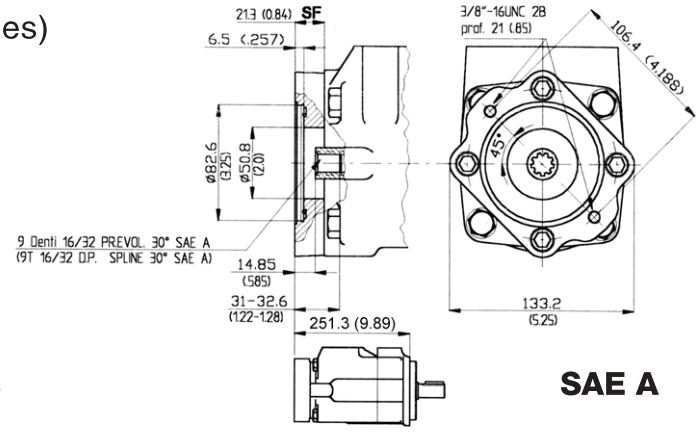

SAE A

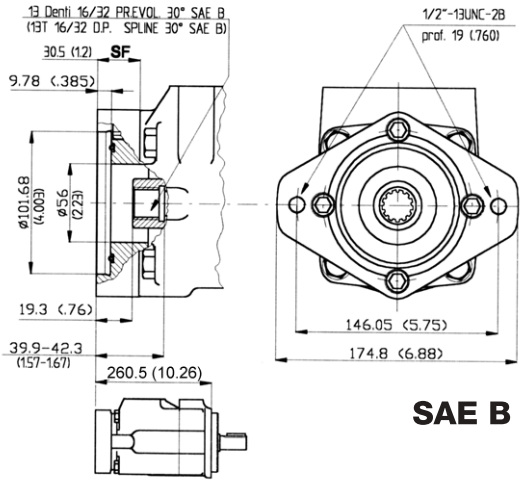

SAE B

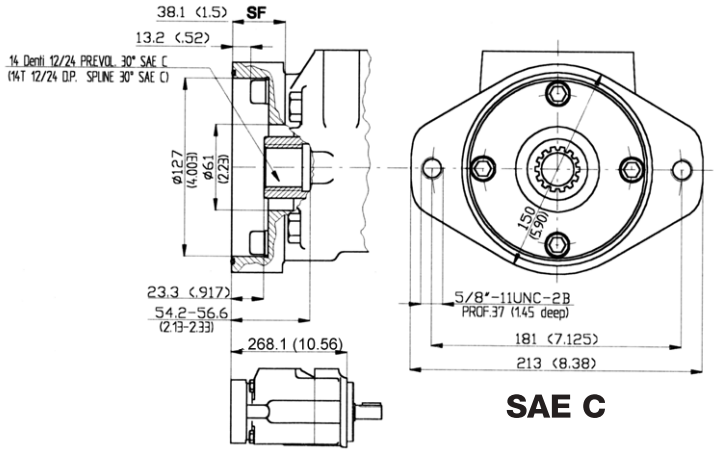

SAE C

Model code breakdown

TQ 04 * ** * * * (L) (*)**

Pump series

Pump type

Rear mounting
A = SAE A, **B** = SAE B, **C** = SAE C

Cartridge type
21 25 30 35 38

Outlet port positions
(outlet viewed from adapter side)
A = Outlet opposite end
B = Outlet 90° CCW from inlet
C = Outlet in line with inlet
D = Outlet 90° CW from inlet

Shaft options
203 = Straight with key
297 = Splined

Seals
(omit with standard seals and one shaft seal in NBR)
V = seal and shaft-seal in FPM (Viton®)
D = standard seals and double shaft-seals in NBR
F = seals and double shaft-seals in FPM (Viton®)

Rotation
(viewed from shaft end)
L = left hand rotation CCW (omit if CW)

Adapter orientation
(viewed from adapter side)
SAE A: **A** = Rotate 45° CW with respect to pump mounting flange; **B** = Rotate 45° CCW with respect to pump mounting flange
SAE B, SAE C: **A** = In line with pump mounting flange; **B** = Rotate 90° with respect to pump mounting flange

Shaft options mm (inches)

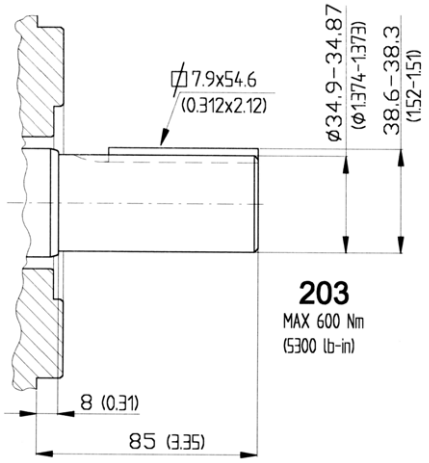

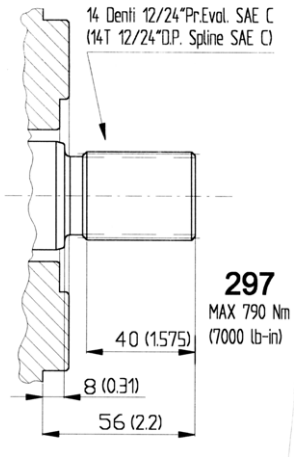

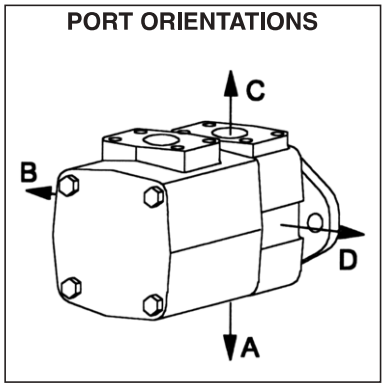

Adapter plate orientations

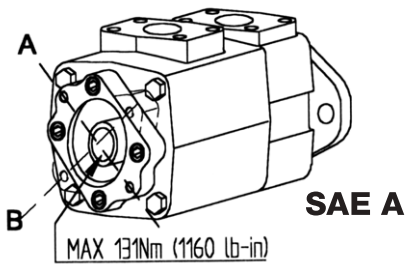

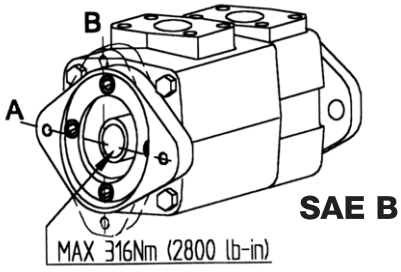

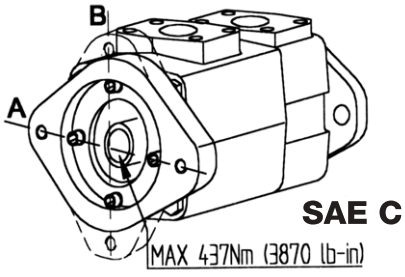

Id. codes of pump components

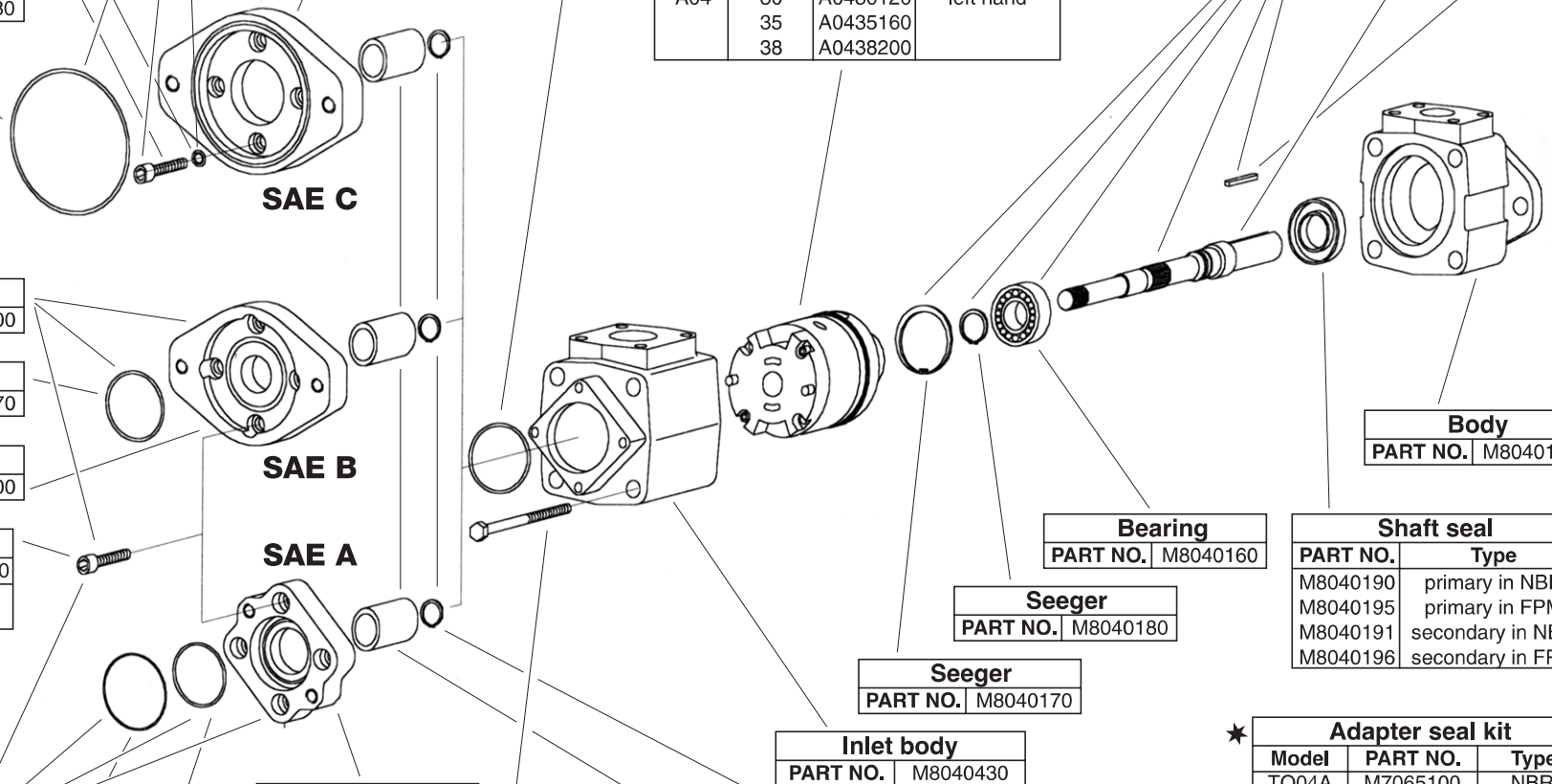

Washer	
PART NO.	M7061025

Adapter kit	
PART NO.	M7060300

Adapter plate	
PART NO.	M8060300

Screw	
PART NO.	M7061020
Torque at 70 Nm (624 lb. in.)	

✶ "O" ring	
PART NO.	M7061130

✶ "O" ring	
PART NO.	M7061050

Cartridge			
Series	Model	PART NO.	PUMP ROTAT.
A04	21	A0421030	right hand
	25	A0425070	
	30	A0430110	
	35	A0435150	
	38	A0438190	
A04	21	A0421040	left hand
	25	A0425080	
	30	A0430120	
	35	A0435160	
	38	A0438200	

Pump	Model	Kit	Shaft	Key
TQ04A	203	M7041203	K0470203	M8048600
TQ04A	297	M7041297	K0490297	-
TQ04B	203	M7042203	K0471203	M8048600
TQ04B	297	M7042297	K0491297	-
TQ04C	203	M7043203	K0472203	M8048600
TQ04C	297	M7043297	K0492297	-

Adapter kit	
PART NO.	M7060200

✶ "O" ring	
PART NO.	M7061070

Adapter plate	
PART NO.	M8060200

Screw	
PART NO.	M7061010
Torque at 70 Nm (624 lb. in.)	

Body	
PART NO.	M8040140

Bearing	
PART NO.	M8040160

Seeger	
PART NO.	M8040180

Seeger	
PART NO.	M8040170

Shaft seal	
PART NO.	Type
M8040190	primary in NBR
M8040195	primary in FPM
M8040191	secondary in NBR
M8040196	secondary in FPM

Inlet body	
PART NO.	M8040430

Adapter plate	
PART NO.	M8060100

Adapter kit	
PART NO.	M7060100

✶ "O" ring	
PART NO.	M7061110

✶ "O" ring	
PART NO.	M7061060

Screw	
PART NO.	M8040210
Torque at 225 Nm (2010 lb. in.)	

Model	Coupling	Seeger	Coupling kit (seeger+coupling)
TQ04C	M7003000	M7061190	M7013000
TQ04B	M7002500	M7061180	M7012500
TQ04A	M7001000	M7061160	M7011000

✶

Adapter seal kit		
Model	PART NO.	Type
TQ04A	M7065100	NBR
TQ04B	M7065200	NBR
TQ04C	M7065300	NBR
TQ04A	M7065150	FPM
TQ04B	M7065250	FPM
TQ04C	M7065350	FPM

For "Pump seal kit" part no. refer to BQ Series technical catalogue

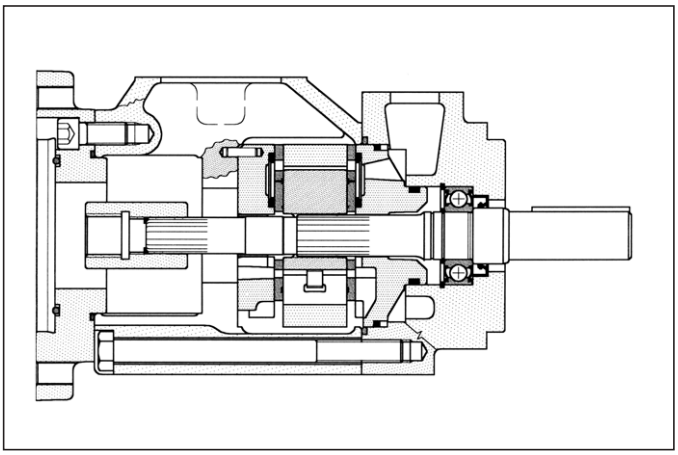

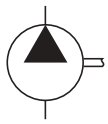

General description

Fixed displacement vane pump, hydraulically balanced, with capacity determined by the type of cartridge used and the speed of rotation. The pump is available in five different displacements from 164 to 230 l/min *(from 42 to 60 gpm)* at 1200 rpm and 7 bar.

Technical characteristics

Cartridge model	Geometric displacement		Rated capacity at 1000 rpm 7 bar		Rated capacity at 1200 rpm 7 bar		Rated capacity at 1500 rpm 7 bar		Maximum pressure with mineral oil		Speed range rpm	
	cm³/g	(in³/r)	l/min	(gpm)	l/min	(gpm)	l/min	(gpm)	bar	(psi)	min	max
A05-42	138,6	(8.46)	136,7	(35.0)	164	(42)	203,4	(53.7)	175	(2538)	600	2200
A05-47	153,5	(9.4)	150,0	(39.2)	180	(47)	222,7	(58.8)	175	(2538)	600	2200
A05-50	162,2	(9.9)	157,5	(41.7)	189	(50)	234	(61.8)	175	(2538)	600	2200
A05-57	183,4	(11.2)	180,8	(47.5)	217	(57)	267	(71.2)	175	(2538)	600	2200
A05-60	193,4	(11.8)	191,7	(50.0)	230	(60)	285	(75.3)	175	(2538)	600	2200

For detailed technical informations please refer to BQ Series catalogue

Hydraulic fluids: mineral oils, phosphate ester based fluids.

Viscosity range *(with mineral oil)*: from 13 to 860 cSt. *(13 to 54 cSt. recommended)*.

Filtration: for the inlet - 149 micron abs., for the return line - 25 micron abs. or better *(with synthetic fluids: for the return line - 10 micron abs. or better)*.

Inlet pressure: *(with mineral oil)*: from -0,17 to +1,4 bar *(-2.5 to + 20 psi)*

Operating temperature: with mineral oil -10°C +70°C *(+30°C to +60°C recommended)*.

Drive: direct and coaxial by means of a flexible coupling.

Main operating data

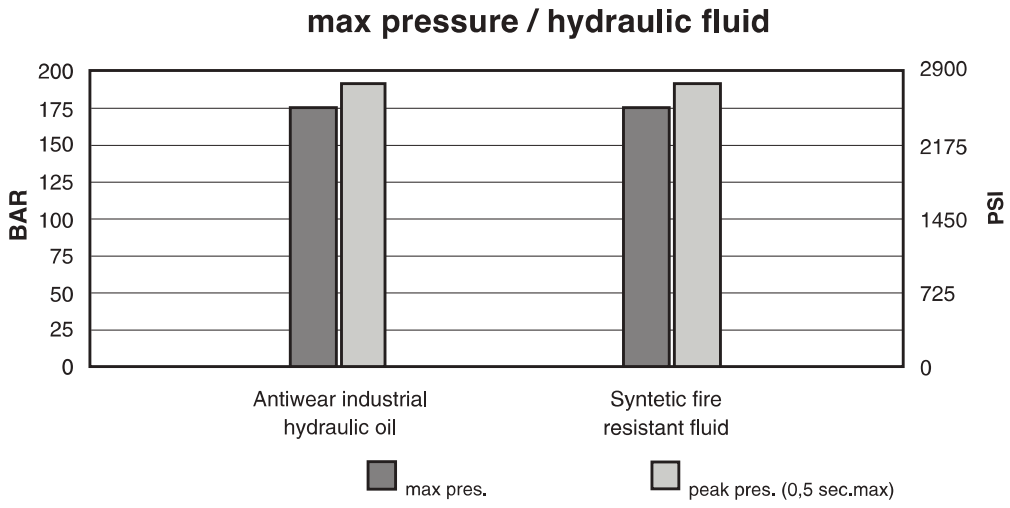

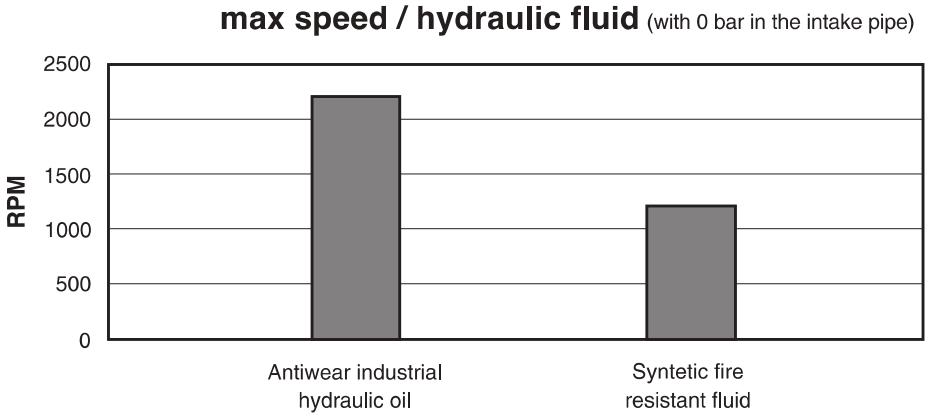

If the intake pressure is not zero bar, use the graph below to find the percentage correction factor to apply to the maximum speed.

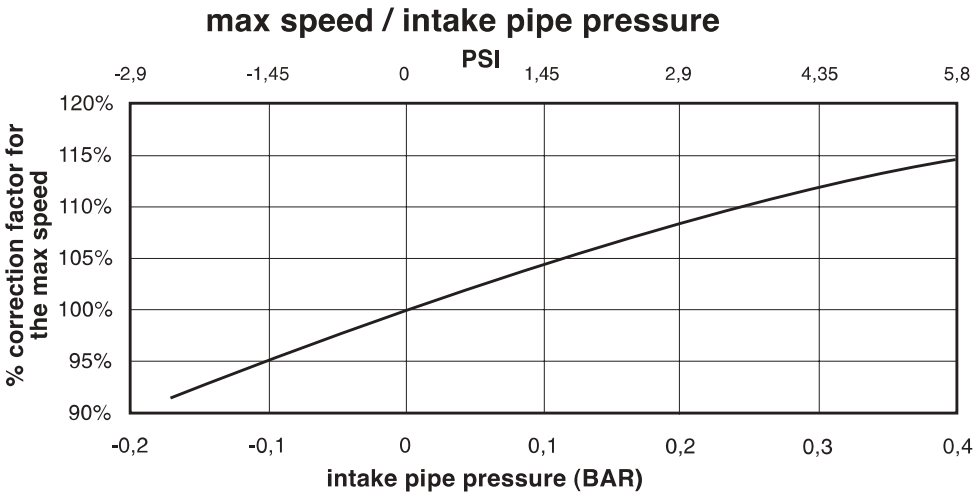

Installation dimensions mm (inches)

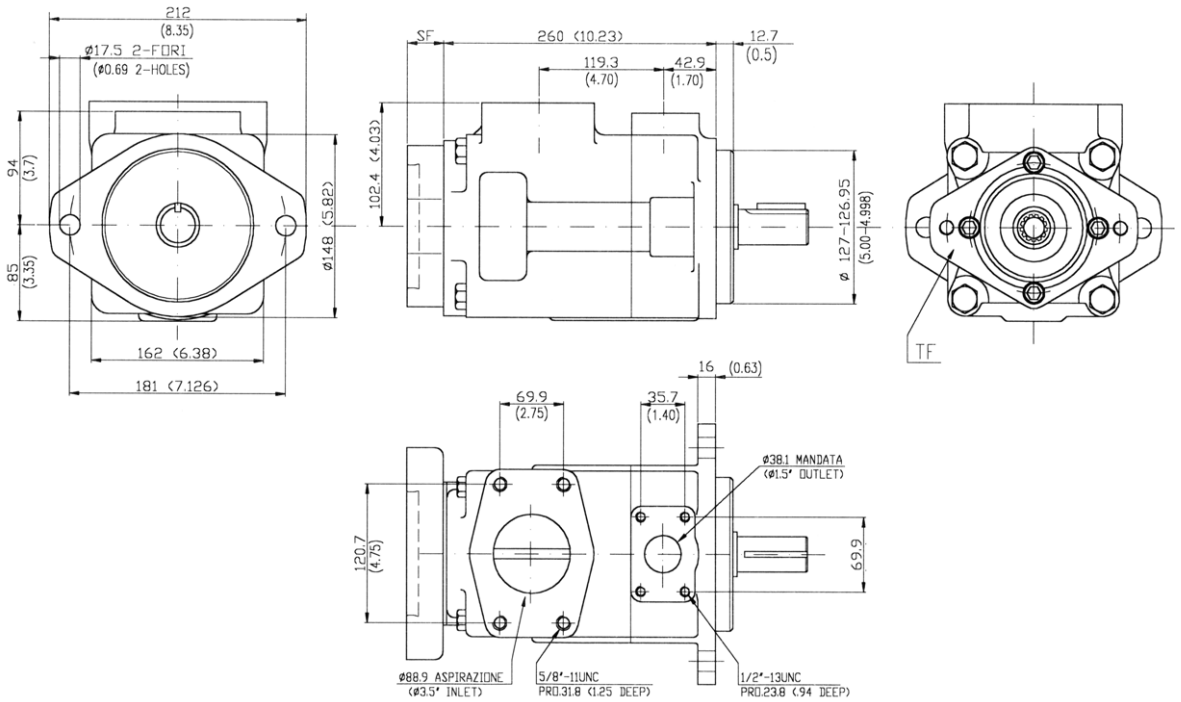

Approx. weight: 38,1 kg. (84 lbs.)

Rear mountings mm (inches)

Different types of coupling with other pumps are also available. Please contact our Technical Dept. for detailed information.

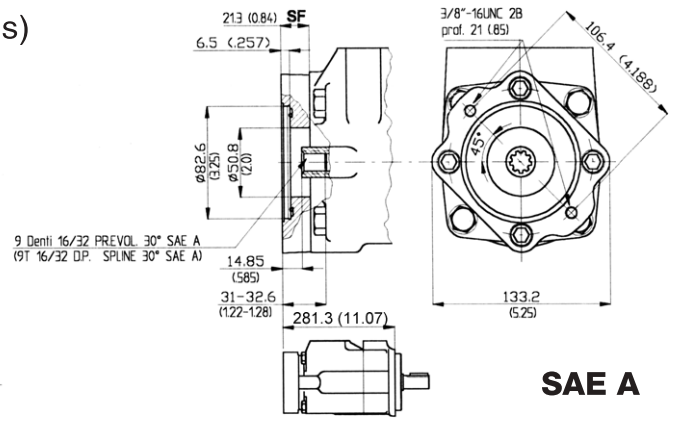

SAE A

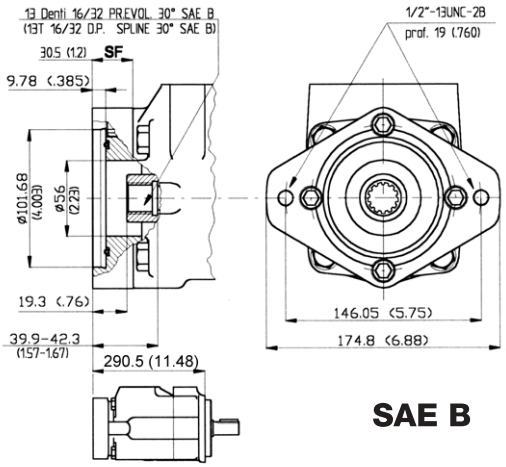

SAE B

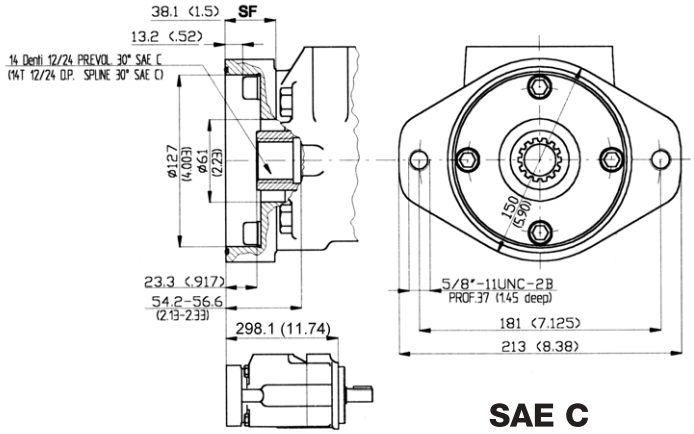

SAE C

Model code breakdown

TQ 05 * ** * * * (L) (*)**

Pump series

Pump type

Rear mounting
A = SAE A, **B** = SAE B, **C** = SAE C

Cartridge type
42 47 50 57 60

Outlet port positions
(outlet viewed from adapter side)
A = Outlet opposite end
B = Outlet 90° CCW from inlet
C = Outlet in line with inlet
D = Outlet 90° CW from inlet

Shaft options
203 = Straight with key
297 = Splined

Adapter orientation
(viewed from adapter side)
SAE A: **A** = Rotate 45° CW with respect to pump mounting flange; **B** = Rotate 45° CCW with respect to pump mounting flange
SAE B, SAE C: **A** = In line with pump mounting flange; **B** = Rotate 90° with respect to pump mounting flange

Rotation
(viewed from shaft end)
L = left hand rotation CCW (omit if CW)

Seals
(omit with standard seals and one shaft seal in NBR)
V = seal and shaft-seal in FPM (Viton®)
D = standard seals and double shaft-seals in NBR
F = seals and double shaft-seals in FPM (Viton®)

Shaft options mm (inches)

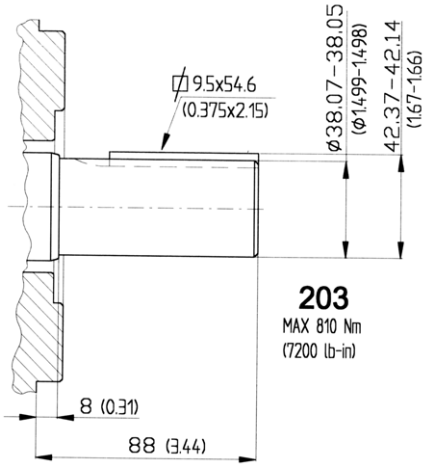

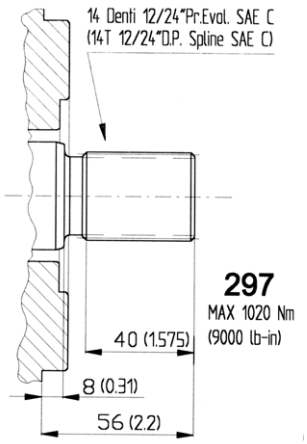

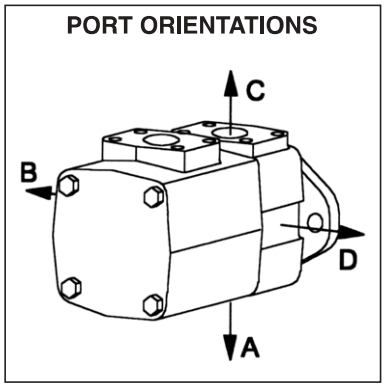

Adapter plate orientations

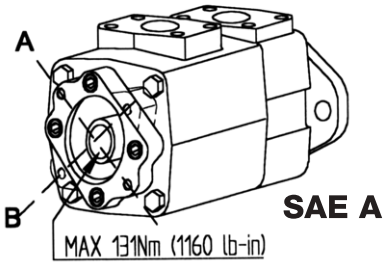

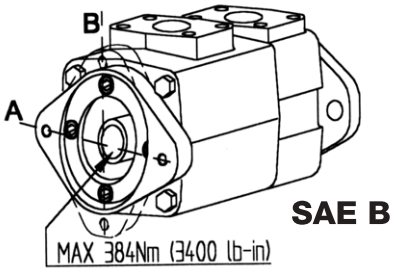

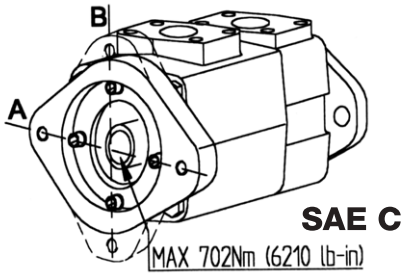

Id. codes of pump components

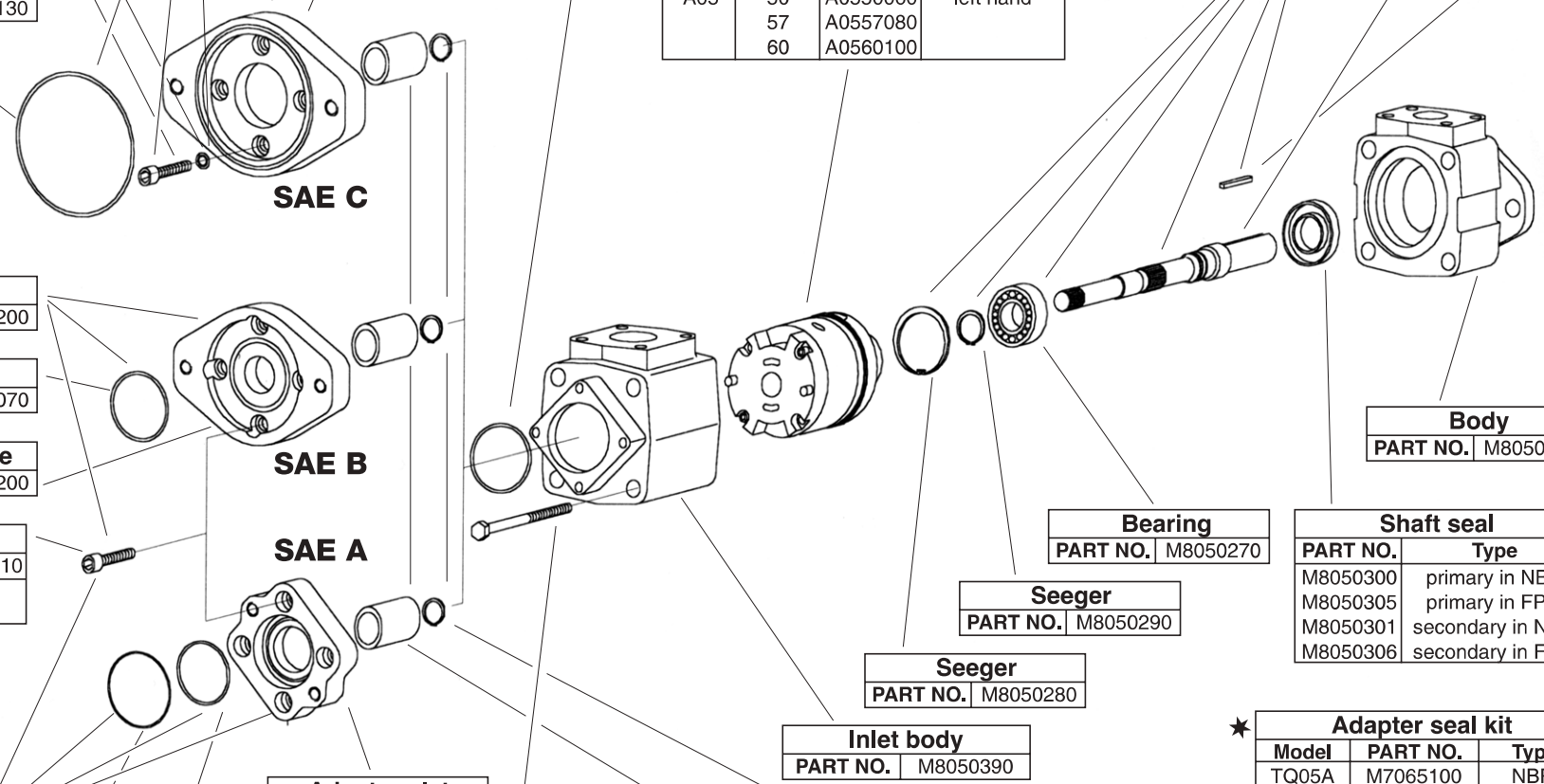

Washer	
PART NO.	M7061025

Screw	
PART NO.	M7061020
Torque at 70 Nm (624 lb. in.)	

✶ "O" ring	
PART NO.	M7061130

Adapter kit	
PART NO.	M7060300

Adapter plate	
PART NO.	M8060300

✶ "O" ring	
PART NO.	M7061050

Adapter kit	
PART NO.	M7060200

✶ "O" ring	
PART NO.	M7061070

Adapter plate	
PART NO.	M8060200

Screw	
PART NO.	M7061010
Torque at 70 Nm (624 lb. in.)	

Adapter kit	
PART NO.	M7060100

✶ "O" ring	
PART NO.	M7061110

✶ "O" ring	
PART NO.	M7061060

Adapter plate	
PART NO.	M8060100

Screw	
PART NO.	M8050320
Torque at 348 Nm (3550 lb. in.)	

Cartridge			
Series	Model	PART NO.	PUMP ROTAT.
A05	42	A0542010	right hand
	47	A0547030	
	50	A0550050	
	57	A0557070	
	60	A0560090	
A05	42	A0542020	left hand
	47	A0547040	
	50	A0550060	
	57	A0557080	
	60	A0560100	

Pump	Model	Kit	Shaft	Key
TQ05A	203	M7051203	K0570203	M8058600
TQ05A	297	M7051297	K0590297	-
TQ05B	203	M7052203	K0571203	M8058600
TQ05B	297	M7052297	K0591297	-
TQ05C	203	M7053203	K0572203	M8058600
TQ05C	297	M7053297	K0592297	-

Body	
PART NO.	M8050250

Bearing	
PART NO.	M8050270

Seeger	
PART NO.	M8050290

Seeger	
PART NO.	M8050280

Inlet body	
PART NO.	M8050390

Shaft seal	
PART NO.	Type
M8050300	primary in NBR
M8050305	primary in FPM
M8050301	secondary in NBR
M8050306	secondary in FPM

Model	Coupling	Seeger	Coupling kit (seeger+coupling)
TQ05C	M7003500	M7061200	M7013500
TQ05B	M7002500	M7061180	M7012500
TQ05A	M7001000	M7061160	M7011000

✶

Adapter seal kit		
Model	PART NO.	Type
TQ05A	M7065100	NBR
TQ05B	M7065200	NBR
TQ05C	M7065300	NBR
TQ05A	M7065150	FPM
TQ05B	M7065250	FPM
TQ05C	M7065350	FPM

For "Pump seal kit" part no. refer to BQ Series technical catalogue

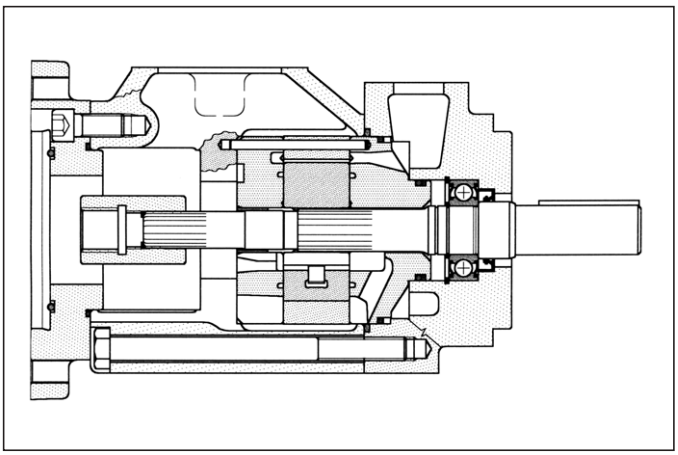

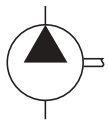

General description

Fixed displacement vane pump, hydraulically balanced, with capacity determined by the type of cartridge used and the speed of rotation. The pump is available in five different displacements from 47 to 79 L/min (from 12 to 21 gpm) at 1200 rpm and 7 bar.

Technical characteristics

Cartridge model	Geometric displacement		Rated capacity at 1000 rpm 7 bar		Rated capacity at 1200 rpm 7 bar		Rated capacity at 1500 rpm 7 bar		Maximum pressure with mineral oil		Speed range rpm	
	cm³/g	(in³/r)	l/min	(gpm)	l/min	(gpm)	l/min	(gpm)	bar	(psi)	min	max
V02-12	40,1	(2.45)	39,1	(10.0)	46,9	(12)	58,8	(15.5)	175	(2538)	600	1800
V02-14	45,4	(2.77)	43,9	(11.7)	52,7	(14)	65,7	(17.4)	175	(2538)	600	1800
V02-17	55,2	(3.37)	53,5	(14.2)	64,2	(17)	80,2	(21.2)	175	(2538)	600	1800
V02-19	60,1	(3.66)	59,2	(15.8)	71,1	(19)	88,7	(23.4)	175	(2538)	600	1800
V02-21	67,5	(4.12)	65,8	(17.5)	79,3	(21)	99,8	(26.4)	175	(2538)	600	1800

For detailed technical informations please refer to BV Series catalogue

Hydraulic fluids: antiwear high quality mineral oils or fire resistant fluid having same lubrication capacities of the mineral oil.

Viscosity range *(with mineral oil)*: from 13 to 860 cSt. *(13 to 54 cSt. recommended)*.

Filtration: for the inlet - 149 micron abs., for the return line - 25 micron abs. or better *(with synthetic fluids: for the return line - 10 micron abs. or better)*.

Inlet pressure: *(with mineral oil)*: from -0,17 to +1,4 bar *(-2.5 to + 20 psi)*

Operating temperature: with mineral oil -10°C +70°C *(+30°C to +60°C recommended),* with water based fluids +15°C to +50°C.

Drive: direct and coaxial by means of a flexible coupling.

Main operating data

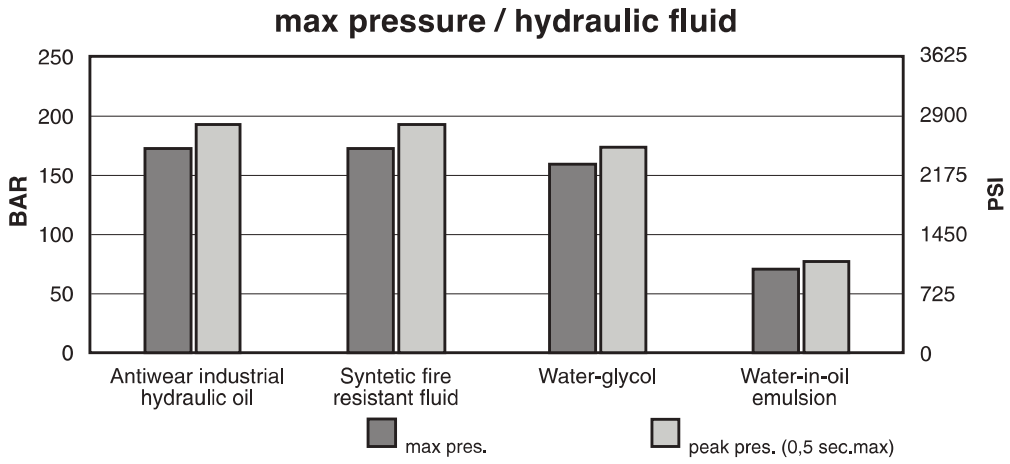

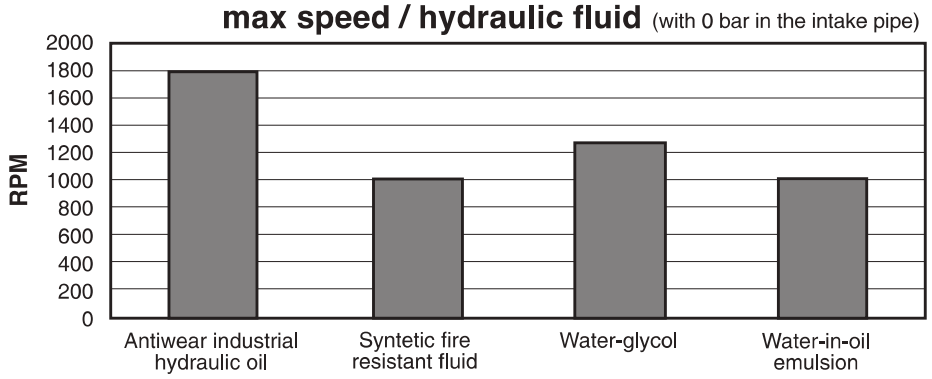

If the intake pressure is not zero bar, use the graph below to find the percentage correction factor to apply to the maximum speed.

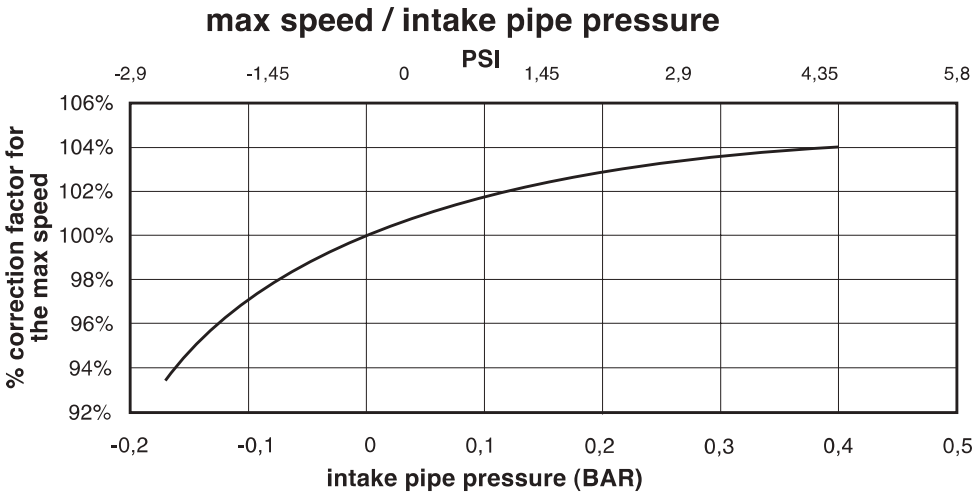

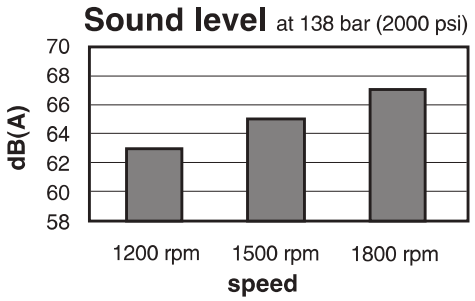

Installation dimensions mm (inches)

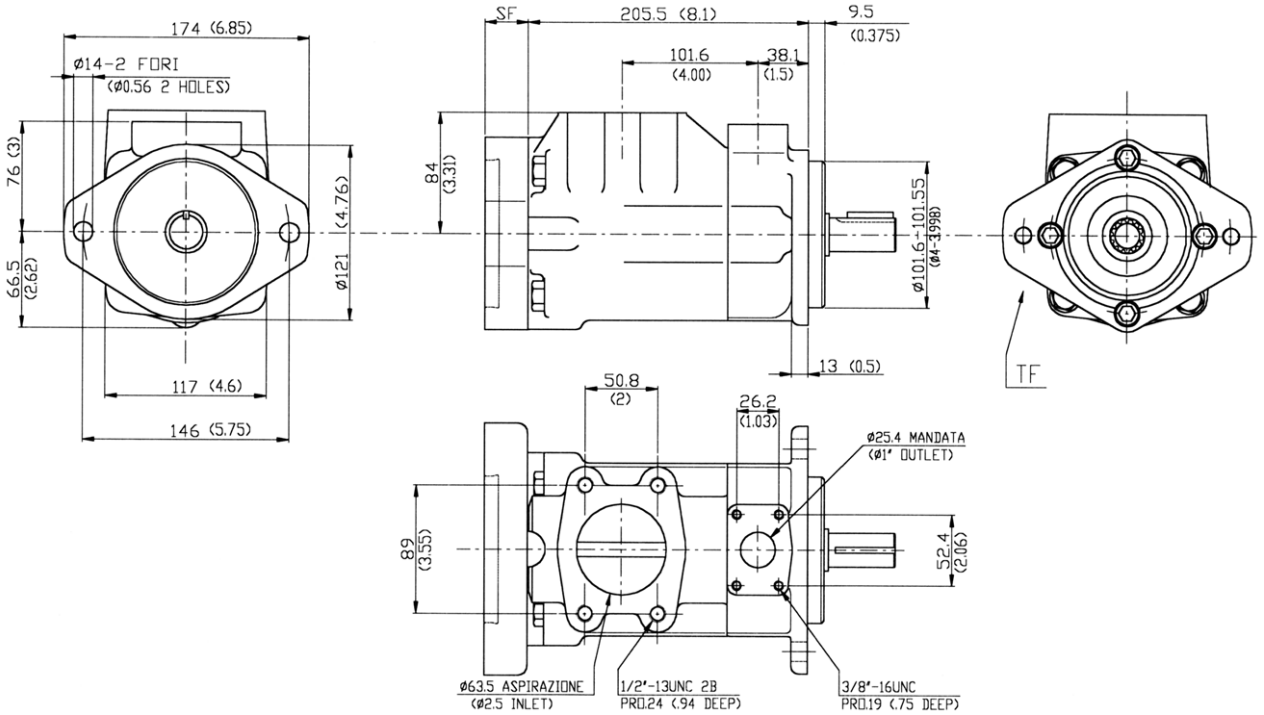

Approx. weight: 19,4 kg. (43 lbs.)

Rear mountings mm (inches)

Different types of coupling with other pumps are also available. Please contact our Technical Dept. for detailed information.

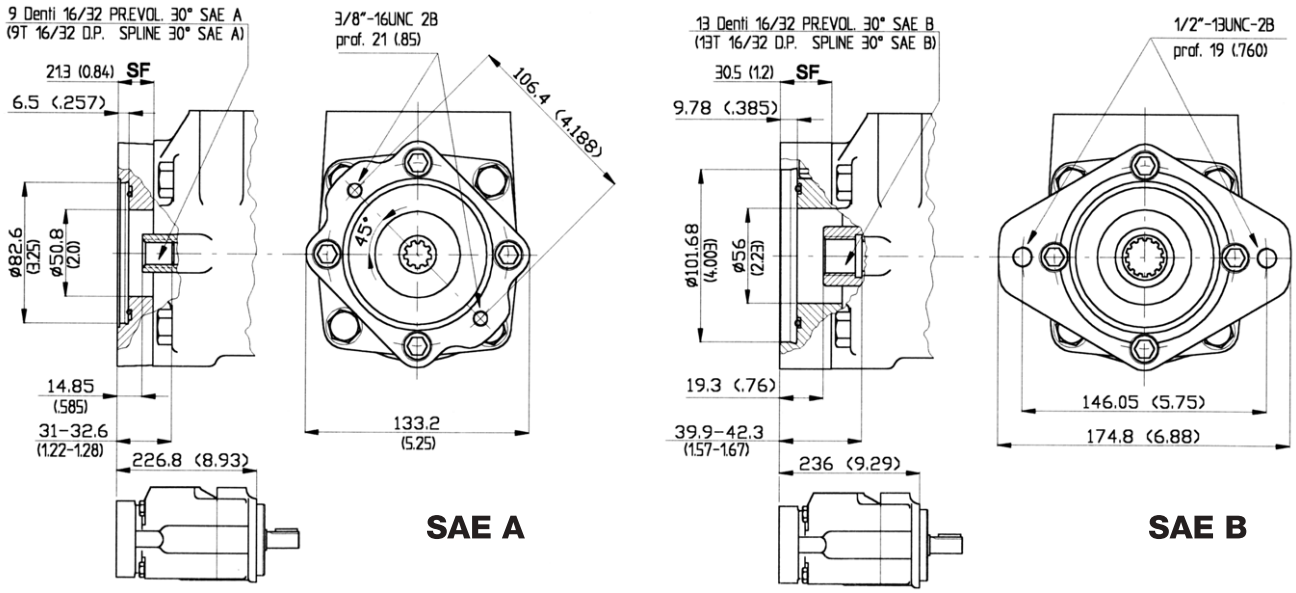

Model code breakdown

TV 02 * * * * * * * * (L) (*)

Pump series

Pump type

Rear mounting
A = SAE A, **B** = SAE B

Cartridge type
12 14 17 19 21

Outlet port positions
(outlet viewed from adapter side)
A = Outlet opposite end
B = Outlet 90° CCW from inlet
C = Outlet in line with inlet
D = Outlet 90° CW from inlet

Shaft options
203 = Straight with key
297 = Splined

Seals
(omit with standard seals and one shaft seal in NBR)
V = seal and shaft-seal in FPM (Viton®)
D = standard seals and double shaft-seals in NBR
F = seals and double shaft-seals in FPM (Viton®)

Rotation
(viewed from shaft end)
L = left hand rotation CCW (omit if CW)

Adapter orientation
(viewed from adapter side)
SAE A
A = Rotate 45° CW with respect to pump mounting flange
B = Rotate 45° CCW with respect to pump mounting flange
SAE B
A = In line with pump mounting flange
B = Rotate 90° with respect to pump mounting flange

Shaft options mm (inches)

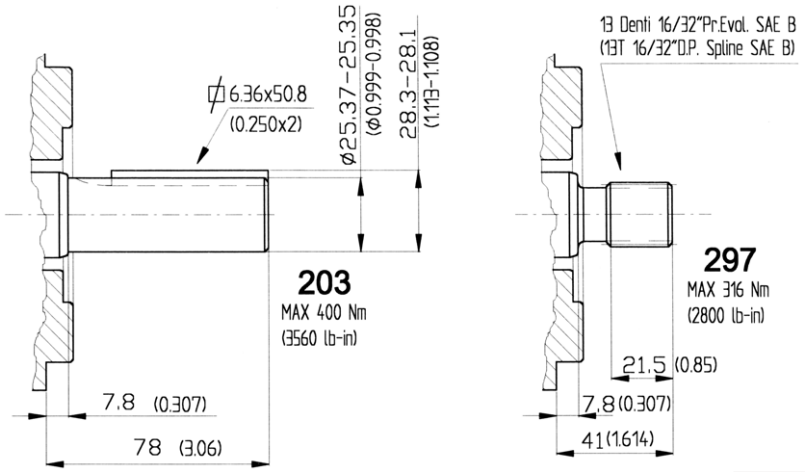

Adapter plate orientations

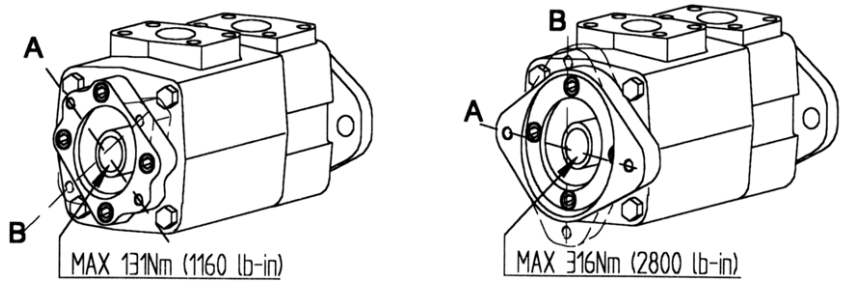

PORT ORIENTATIONS

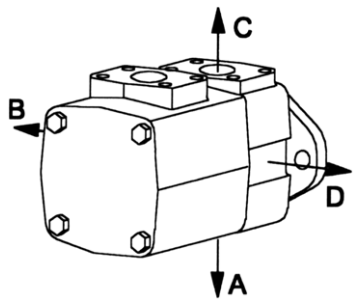

Id. codes of pump components

Model	Coupling	Seeger	Coupling kit (seeger+coupling)
TQ02B	M7002000	M7061170	M7012000
TQ02A	M7001000	M7061160	M7011000

Cartridge			
Series	Model	PART NO.	PUMP ROTAT.
V02	12	V0212030	right hand
	14	V0214070	
	17	V0217110	
	19	V0219150	
	21	V0221190	
V02	12	V0212040	left hand
	14	V0214080	
	17	V0217120	
	19	V0219160	
	21	V0221200	

Pump	Model	Kit	Shaft	Key
TV02A	203	M7021203	K0270203	M8028600
TV02A	297	M7021297	K0290297	-
TV02B	203	M7022203	K0271203	M8028600
TV02B	297	M7022297	K0291297	-

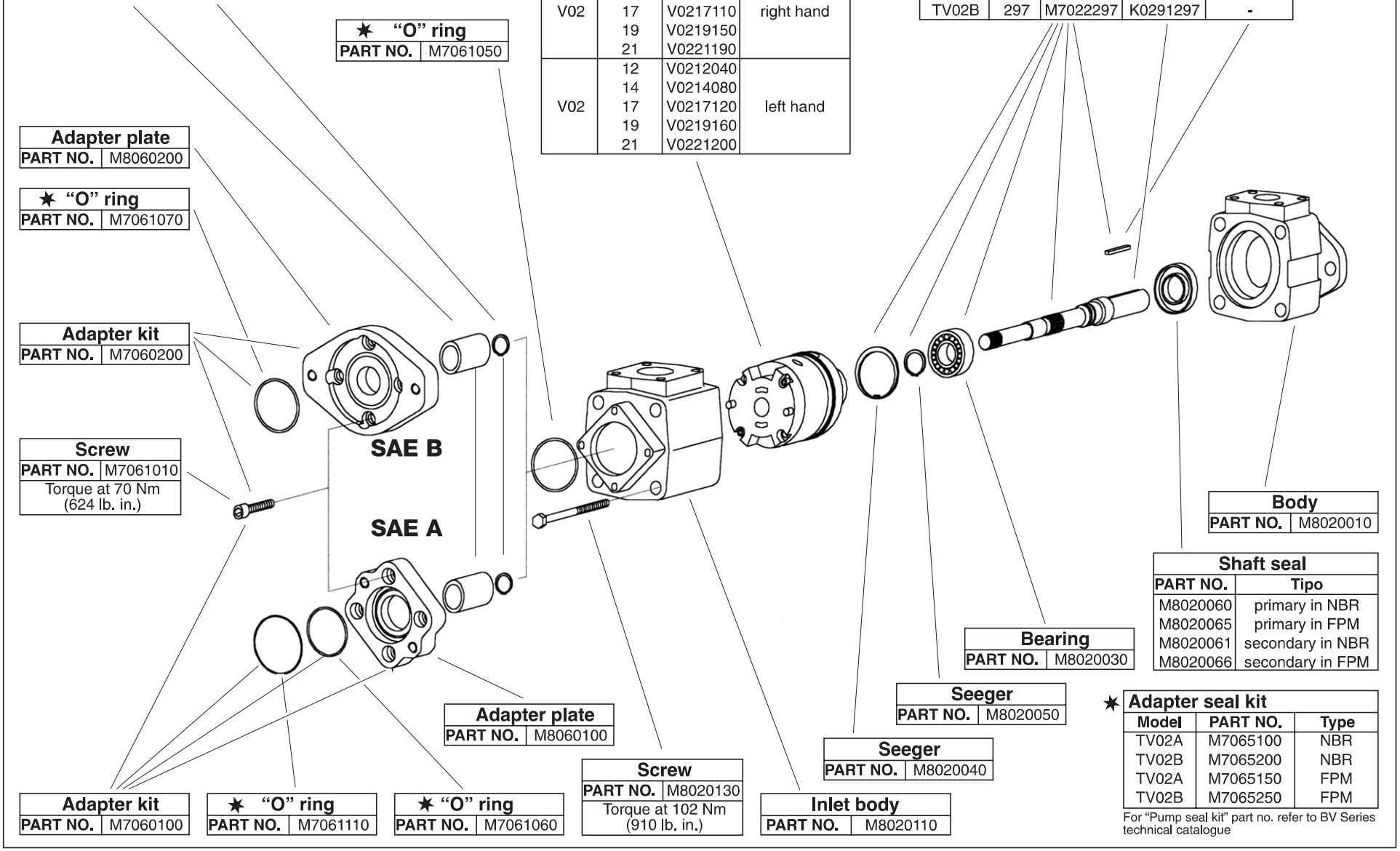

✶ "O" ring	
PART NO.	M7061050

Adapter plate	
PART NO.	M8060200

✶ "O" ring	
PART NO.	M7061070

Adapter kit	
PART NO.	M7060200

Screw	
PART NO.	M7061010
Torque at 70 Nm (624 lb. in.)	

Adapter kit	
PART NO.	M7060100

✶ "O" ring	
PART NO.	M7061110

✶ "O" ring	
PART NO.	M7061060

Adapter plate	
PART NO.	M8060100

Screw	
PART NO.	M8020130
Torque at 102 Nm (910 lb. in.)	

Inlet body	
PART NO.	M8020110

Seeger	
PART NO.	M8020040

Seeger	
PART NO.	M8020050

Bearing	
PART NO.	M8020030

Shaft seal	
PART NO.	Tipo
M8020060	primary in NBR
M8020065	primary in FPM
M8020061	secondary in NBR
M8020066	secondary in FPM

Body	
PART NO.	M8020010

✶ Adapter seal kit

Model	PART NO.	Type
TV02A	M7065100	NBR
TV02B	M7065200	NBR
TV02A	M7065150	FPM
TV02B	M7065250	FPM

For "Pump seal kit" part no. refer to BV Series technical catalogue

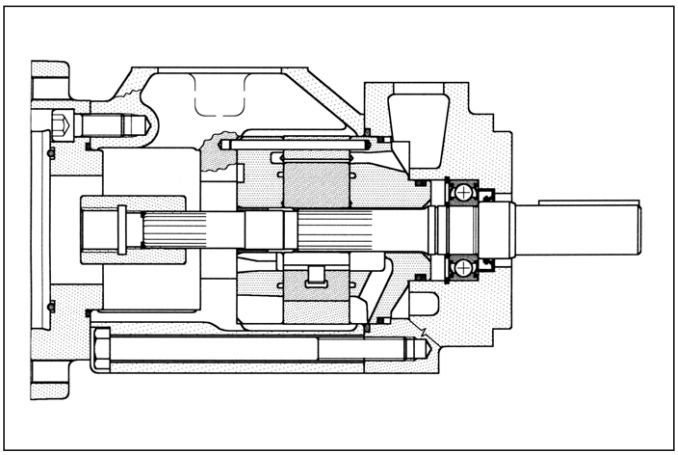

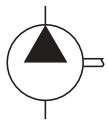

General description

Fixed displacement vane pump, hydraulically balanced, with capacity determined by the type of cartridge used and the speed of rotation. The pump is available in five different displacements from 80 to 140 l/min *(from 21 to 38 gpm)* at 1200 rpm and 7 bar.

Technical characteristics

Cartridge model	Geometric displacement		Rated capacity at 1000 rpm 7 bar		Rated capacity at 1200 rpm 7 bar		Rated capacity at 1500 rpm 7 bar		Maximum pressure with mineral oil		Speed range rpm	
	cm³/g	(in³/r)	l/min	(gpm)	l/min	(gpm)	l/min	(gpm)	bar	(psi)	min	max
V04-21	69,0	(4.2)	66,3	(17.5)	79,5	(21)	101,4	(26.8)	175	(2538)	600	1800
V04-25	81,6	(5)	78,3	(20.8)	94,0	(25)	120,1	(31.7)	175	(2538)	600	1800
V04-30	97,7	(6)	94,8	(25.0)	113,8	(30)	141,2	(37.3)	175	(2538)	600	1800
V04-35	112,7	(6.9)	109,7	(29.2)	131,6	(35)	167,2	(44.1)	175	(2538)	600	1800
V04-38	121,6	(7.4)	116,6	(31.7)	139,9	(38)	177,3	(46.8)	175	(2538)	600	1800

For detailed technical informations please refer to BV Series catalogue

Hydraulic fluids: antiwear high quality mineral oils or fire resistant fluid having same lubrication capacities of the mineral oil.

Viscosity range *(with mineral oil)*: from 13 to 860 cSt. *(13 to 54 cSt. recommended)*.

Filtration: for the inlet - 149 micron abs., for the return line - 25 micron abs. or better *(with synthetic fluids: for the return line - 10 micron abs. or better)*.

Inlet pressure: *(with mineral oil)*: from -0,17 to +1,4 bar *(-2.5 to + 20 psi)*

Operating temperature: with mineral oil -10°C +70°C *(+30°C to +60°C recommended),* with water based fluids +15°C to +50°C.

Drive: direct and coaxial by means of a flexible coupling.

Main operating data

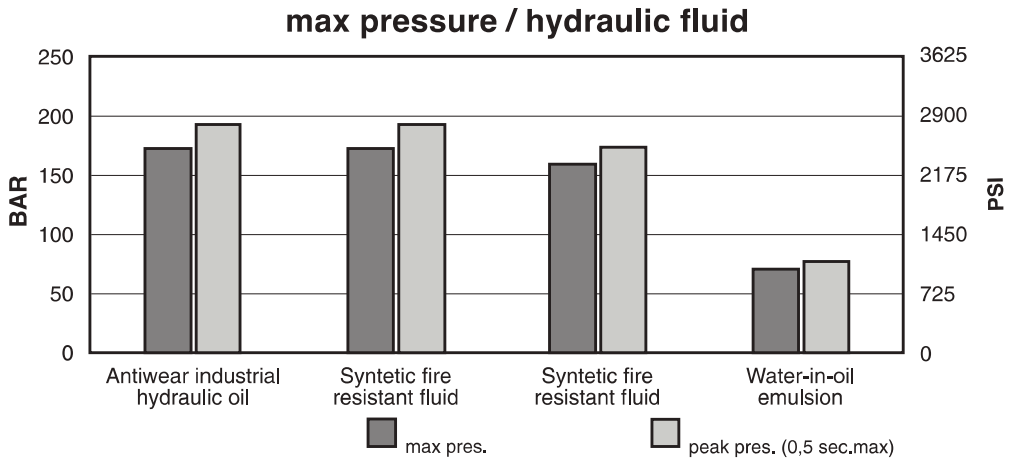

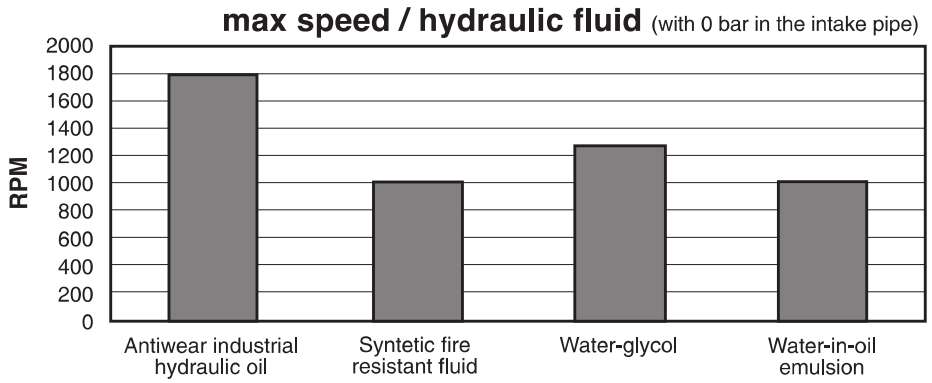

If the intake pressure is not zero bar, use the graph below to find the percentage correction factor to apply to the maximum speed.

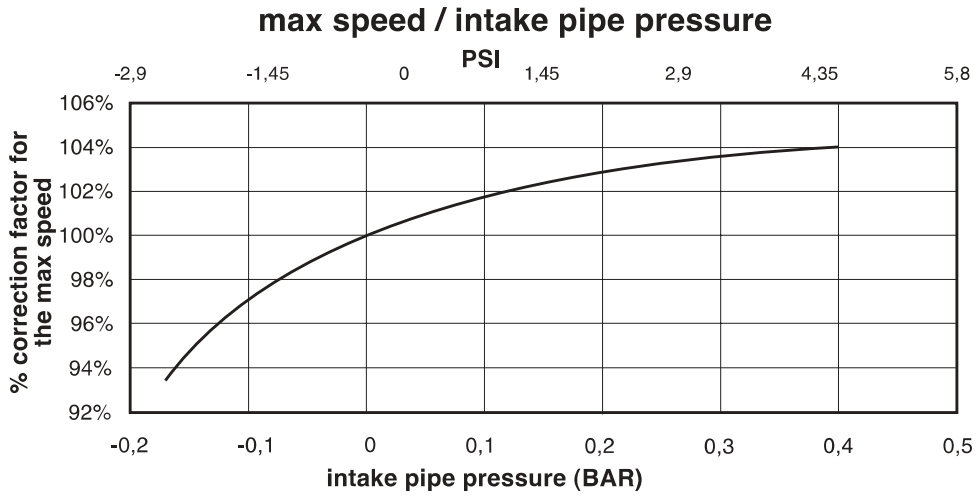

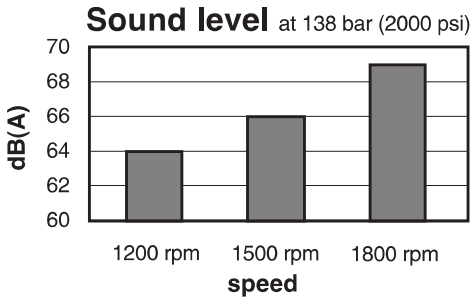

Installation dimensions mm (inches)

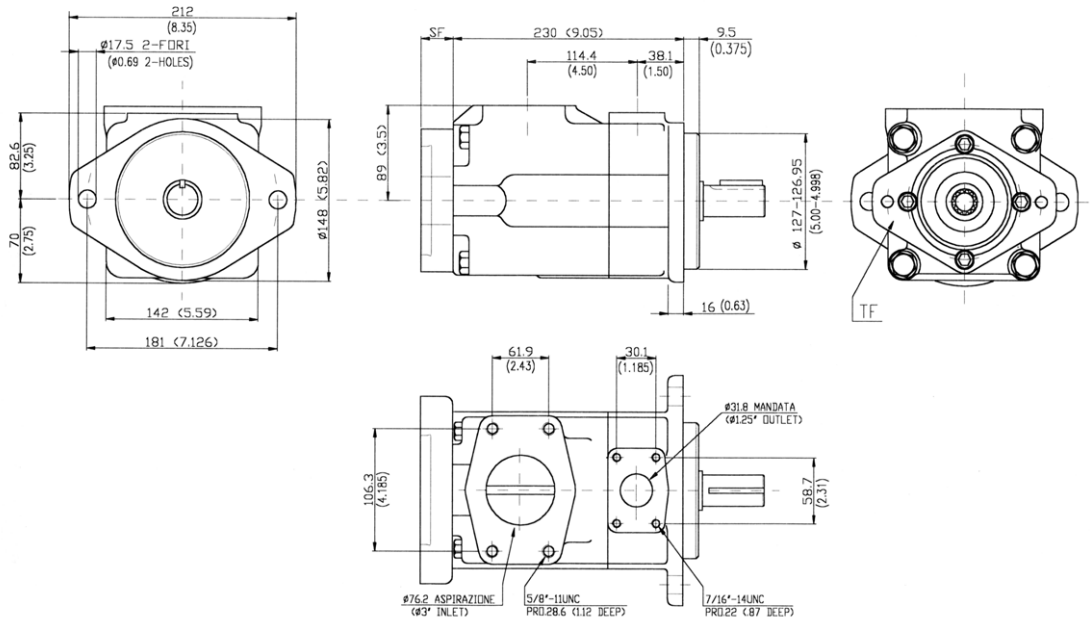

Approx. weight: 28,7 kg. (63 lbs.)

Rear mountings mm (inches)

Different types of coupling with other pumps are also available. Please contact our Technical Dept. for detailed information.

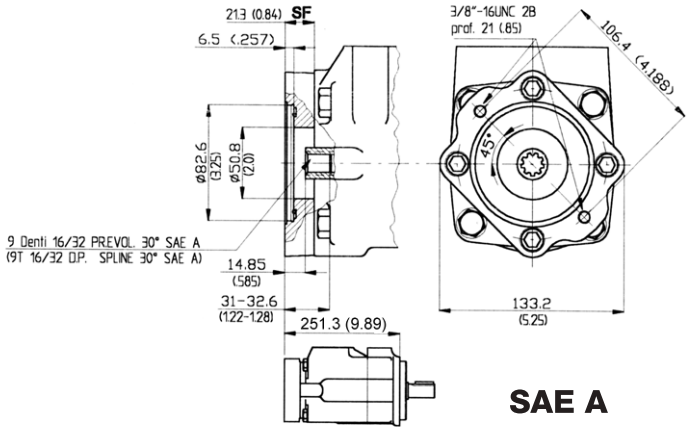

SAE A

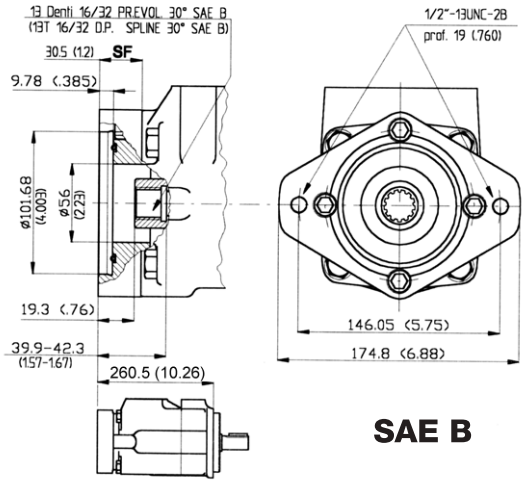

SAE B

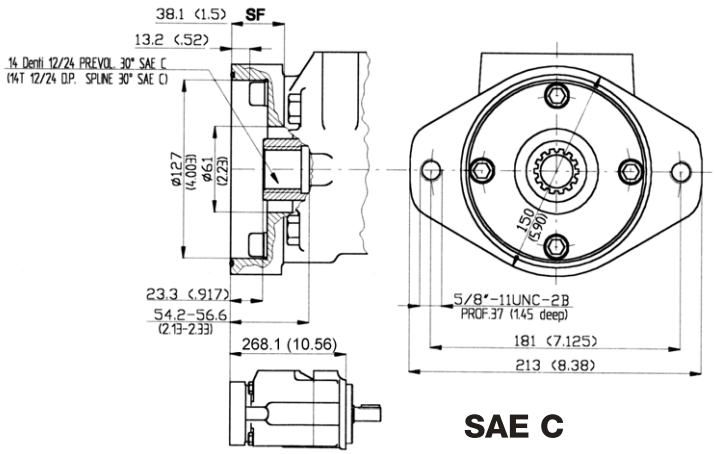

SAE C

Model code breakdown

TV 04 * ** * * * (L) (*)**

Pump series

Pump type

Rear mounting
A = SAE A, **B** = SAE B, **C** = SAE C

Cartridge type
21 25 30 35 38

Outlet port positions
(outlet viewed from adapter side)
A = Outlet opposite end
B = Outlet 90° CCW from inlet
C = Outlet in line with inlet
D = Outlet 90° CW from inlet

Shaft options
203 = Straight with key
297 = Splined

Seals
(omit with standard seals and one shaft seal in NBR)
V = seal and shaft-seal in FPM (Viton®)
D = standard seals and double shaft-seals in NBR
F = seals and double shaft-seals in FPM (Viton®)

Rotation
(viewed from shaft end)
L = left hand rotation CCW (omit if CW)

Adapter orientation
(viewed from adapter side)
SAE A: **A** = Rotate 45° CW with respect to pump mounting flange; **B** = Rotate 45° CCW with respect to pump mounting flange
SAE B, SAE C: **A** = In line with pump mounting flange; **B** = Rotate 90° with respect to pump mounting flange

Shaft options mm (inches)

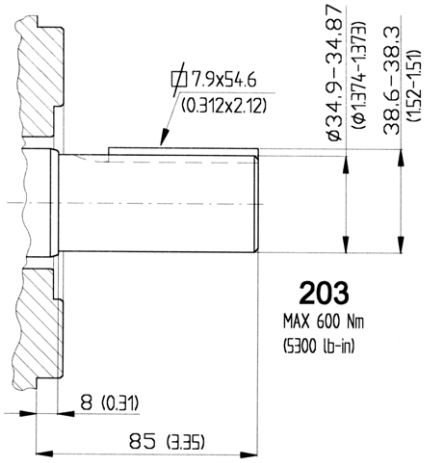

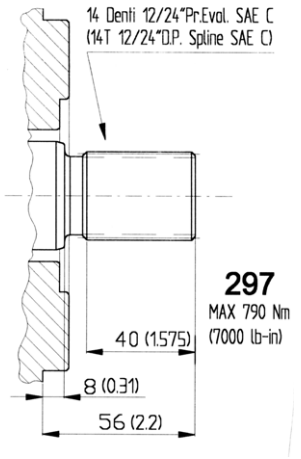

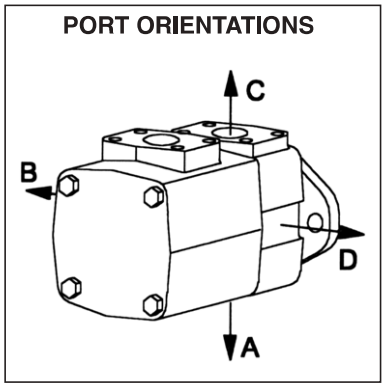

Adapter plate orientations

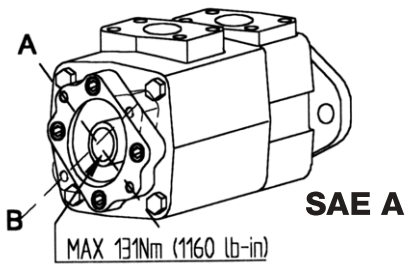

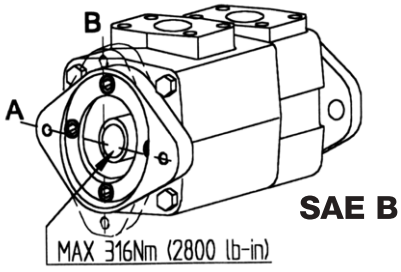

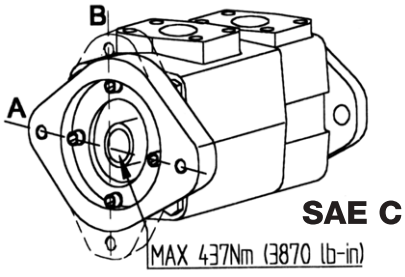

Id. codes of pump components

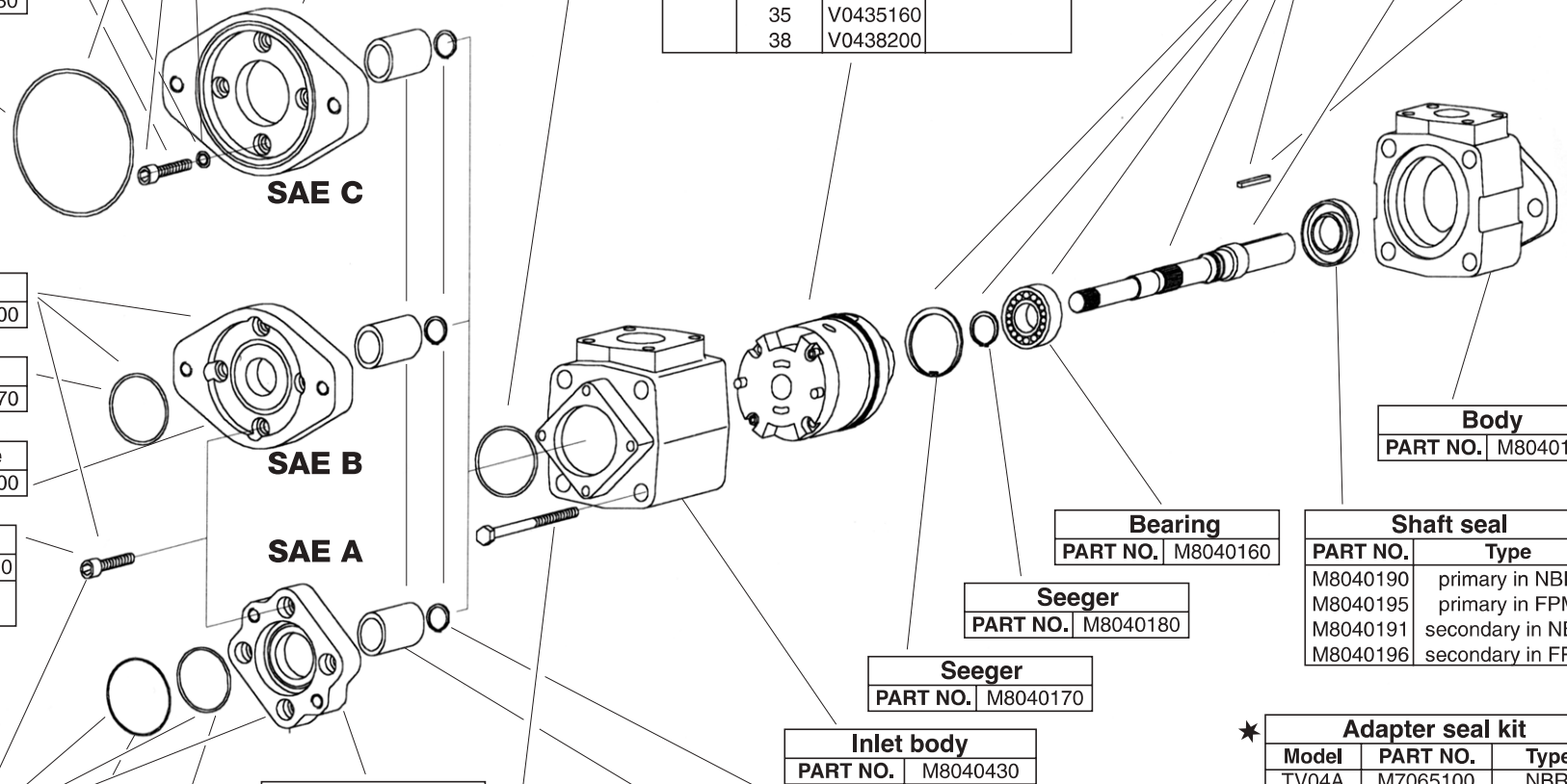

Washer	
PART NO.	M7061025

Adapter kit	
PART NO.	M7060300

Adapter plate	
PART NO.	M8060300

Screw	
PART NO.	M7061020
Torque at 70 Nm (624 lb. in.)	

✶ "O" ring	
PART NO.	M7061130

✶ "O" ring	
PART NO.	M7061050

Adapter kit	
PART NO.	M7060200

✶ "O" ring	
PART NO.	M7061070

Adapter plate	
PART NO.	M8060200

Screw	
PART NO.	M7061010
Torque at 70 Nm (624 lb. in.)	

Adapter plate	
PART NO.	M8060100

Adapter kit	
PART NO.	M7060100

✶ "O" ring	
PART NO.	M7061110

✶ "O" ring	
PART NO.	M7061060

Screw	
PART NO.	M8040210
Torque at 225 Nm (2010 lb. in.)	

Cartridge			
Series	Model	PART NO.	PUMP ROTAT.
V04	21	V0421030	right hand
	25	V0425070	
	30	V0430110	
	35	V0435150	
	38	V0438190	
V04	21	V0421040	left hand
	25	V0425080	
	30	V0430120	
	35	V0435160	
	38	V0438200	

Pump	Model	Kit	Shaft	Key
TV04A	203	M7041203	K0470203	M8048600
TV04A	297	M7041297	K0490297	-
TV04B	203	M7042203	K0471203	M8048600
TV04B	297	M7042297	K0491297	-
TV04C	203	M7043203	K0472203	M8048600
TV04C	297	M7043297	K0492297	-

Body	
PART NO.	M8040140

Bearing	
PART NO.	M8040160

Seeger	
PART NO.	M8040180

Seeger	
PART NO.	M8040170

Inlet body	
PART NO.	M8040430

Shaft seal	
PART NO.	Type
M8040190	primary in NBR
M8040195	primary in FPM
M8040191	secondary in NBR
M8040196	secondary in FPM

Model	Coupling	Seeger	Coupling kit (seeger+coupling)
TV04C	M7003000	M7061190	M7013000
TV04B	M7002500	M7061180	M7012500
TV04A	M7001000	M7061160	M7011000

✶ Adapter seal kit		
Model	PART NO.	Type
TV04A	M7065100	NBR
TV04B	M7065200	NBR
TV04C	M7065300	NBR
TV04A	M7065150	FPM
TV04B	M7065250	FPM
TV04C	M7065350	FPM

For "Pump seal kit" part no. refer to BV Series technical catalogue

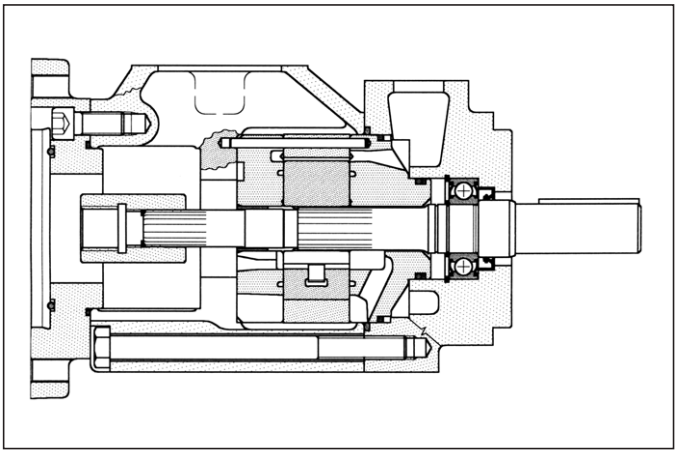

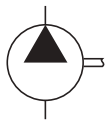

General description

Fixed displacement vane pump, hydraulically balanced, with capacity determined by the type of cartridge used and the speed of rotation. The pump is available in five different displacements from 164 to 230 l/min *(from 42 to 60 gpm)* at 1200 rpm and 7 bar.

Technical characteristics

Cartridge model	Geometric displacement		Rated capacity at 1000 rpm 7 bar		Rated capacity at 1200 rpm 7 bar		Rated capacity at 1500 rpm 7 bar		Maximum pressure with mineral oil		Speed range rpm	
	cm³/g	(in³/r)	l/min	(gpm)	l/min	(gpm)	l/min	(gpm)	bar	(psi)	min	max
V05-42	138,6	(8.46)	136,7	(35.0)	164	(42)	203,4	(53.7)	175	(2538)	600	1800
V05-47	153,5	(9.4)	150,0	(39.2)	180	(47)	222,7	(58.8)	175	(2538)	600	1800
V05-50	162,2	(9.9)	157,5	(41.7)	189	(50)	234	(61.8)	175	(2538)	600	1800
V05-57	183,4	(11.2)	180,8	(47.5)	217	(57)	267	(71.2)	175	(2538)	600	1800
V05-60	193,4	(11.8)	191,7	(50.0)	230	(60)	285	(75.3)	175	(2538)	600	1800

For detailed technical informations please refer to BV Series catalogue

Hydraulic fluids: antiwear high quality mineral oils or fire resistant fluid having same lubrication capacities of the mineral oil.

Viscosity range *(with mineral oil)*: from 13 to 860 cSt. *(13 to 54 cSt. recommended)*.

Filtration: for the inlet - 149 micron abs., for the return line - 25 micron abs. or better *(with synthetic fluids: for the return line - 10 micron abs. or better)*.

Inlet pressure: *(with mineral oil)*: from -0,17 to +1,4 bar *(-2.5 to + 20 psi)*

Operating temperature: with mineral oil -10°C +70°C *(+30°C to +60°C recommended),* with water based fluids +15°C to +50°C.

Drive: direct and coaxial by means of a flexible coupling.

Main operating data

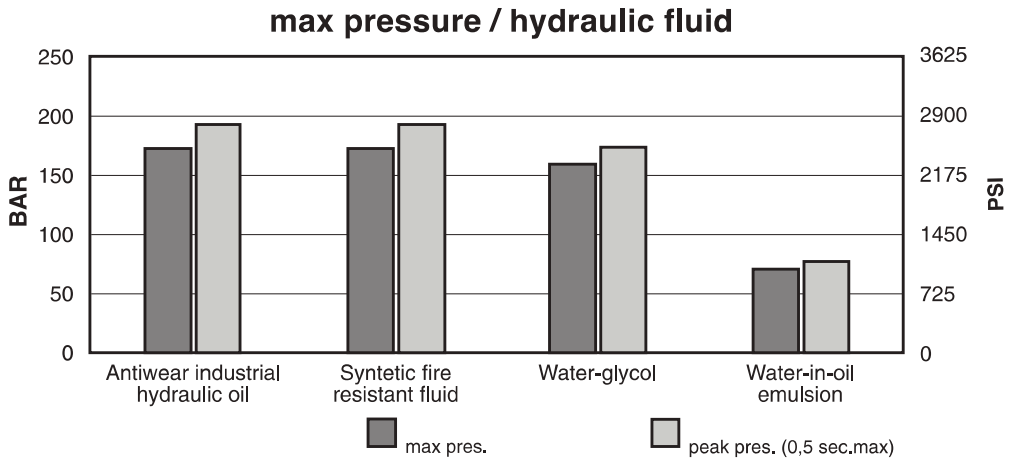

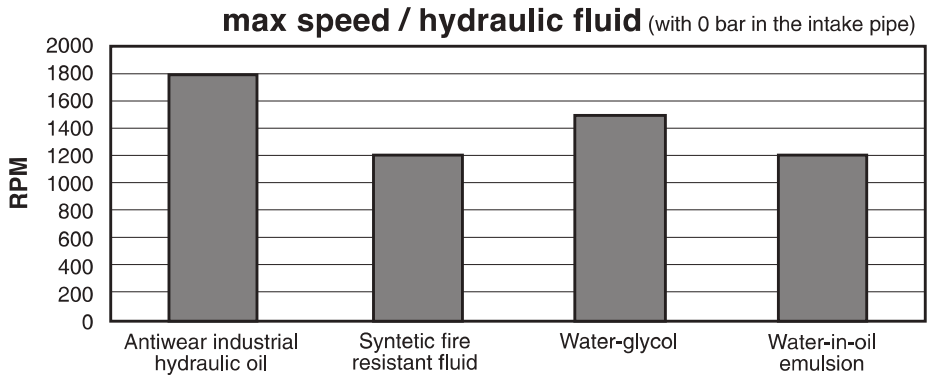

If the intake pressure is not zero bar, use the graph below to find the percentage correction factor to apply to the maximum speed.

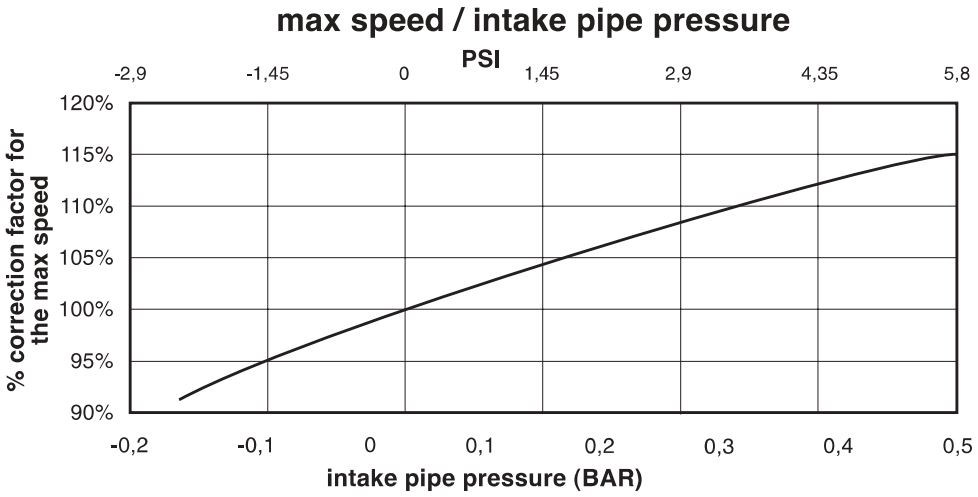

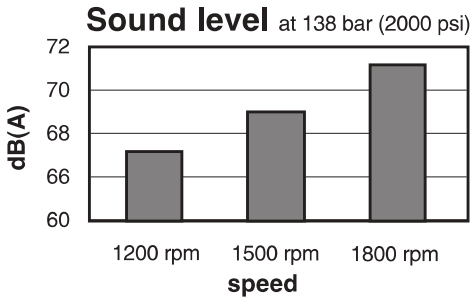

Installation dimensions mm (inches)

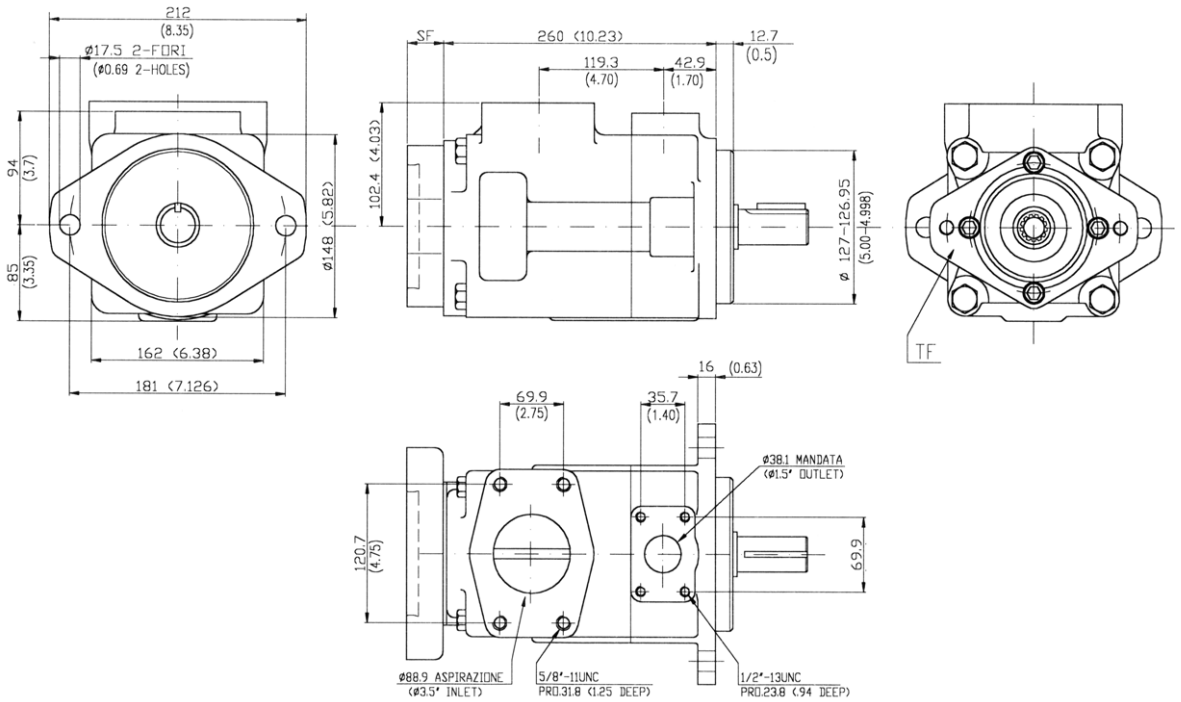

Approx. weight: 38,1 kg. (84 lbs.)

Rear mountings mm (inches)

Different types of coupling with other pumps are also available. Please contact our Technical Dept. for detailed information.

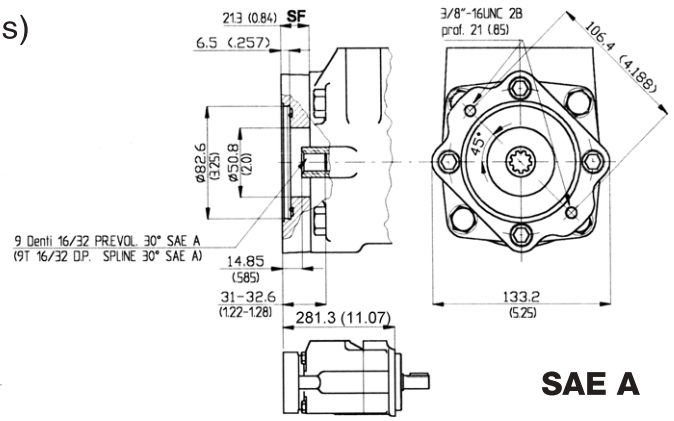

SAE A

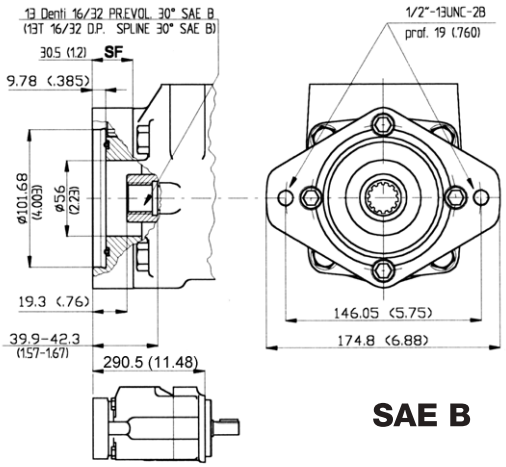

SAE B

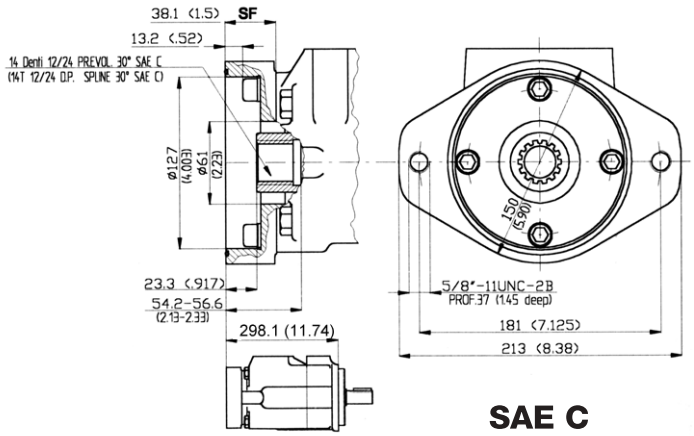

SAE C

Model code breakdown

TV 05 * ** * * * (L) (*)**

Pump series

Pump type

Rear mounting
A = SAE A, **B** = SAE B, **C** = SAE C

Cartridge type
42 47 50 57 60

Outlet port positions
(outlet viewed from adapter side)
A = Outlet opposite end
B = Outlet 90° CCW from inlet
C = Outlet in line with inlet
D = Outlet 90° CW from inlet

Shaft options
203 = Straight with key
297 = Splined

Seals
(omit with standard seals and one shaft seal in NBR)
V = seal and shaft-seal in FPM (Viton®)
D = standard seals and double shaft-seals in NBR
F = seals and double shaft-seals in FPM (Viton®)

Rotation
(viewed from shaft end)
L = left hand rotation CCW (omit if CW)

Adapter orientation
(viewed from adapter side)
SAE A: **A** = Rotate 45° CW with respect to pump mounting flange; **B** = Rotate 45° CCW with respect to pump mounting flange
SAE B, SAE C: **A** = In line with pump mounting flange; **B** = Rotate 90° with respect to pump mounting flange

Shaft options mm (inches)

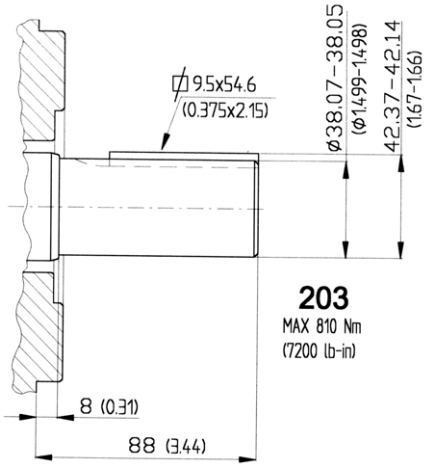

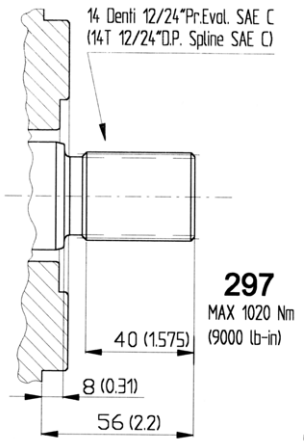

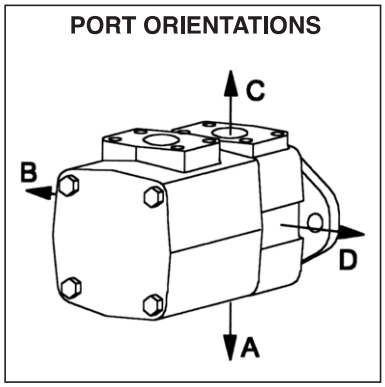

Adapter plate orientations

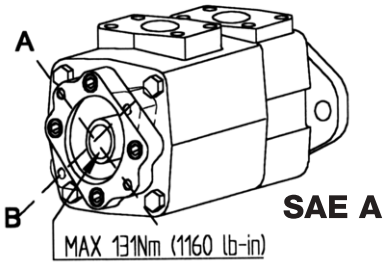

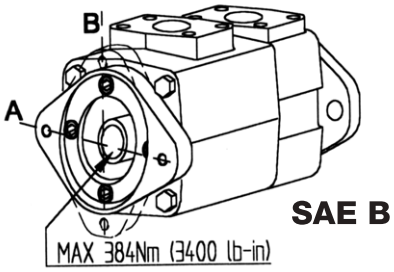

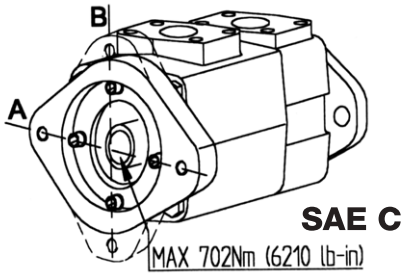

Id. codes of pump components

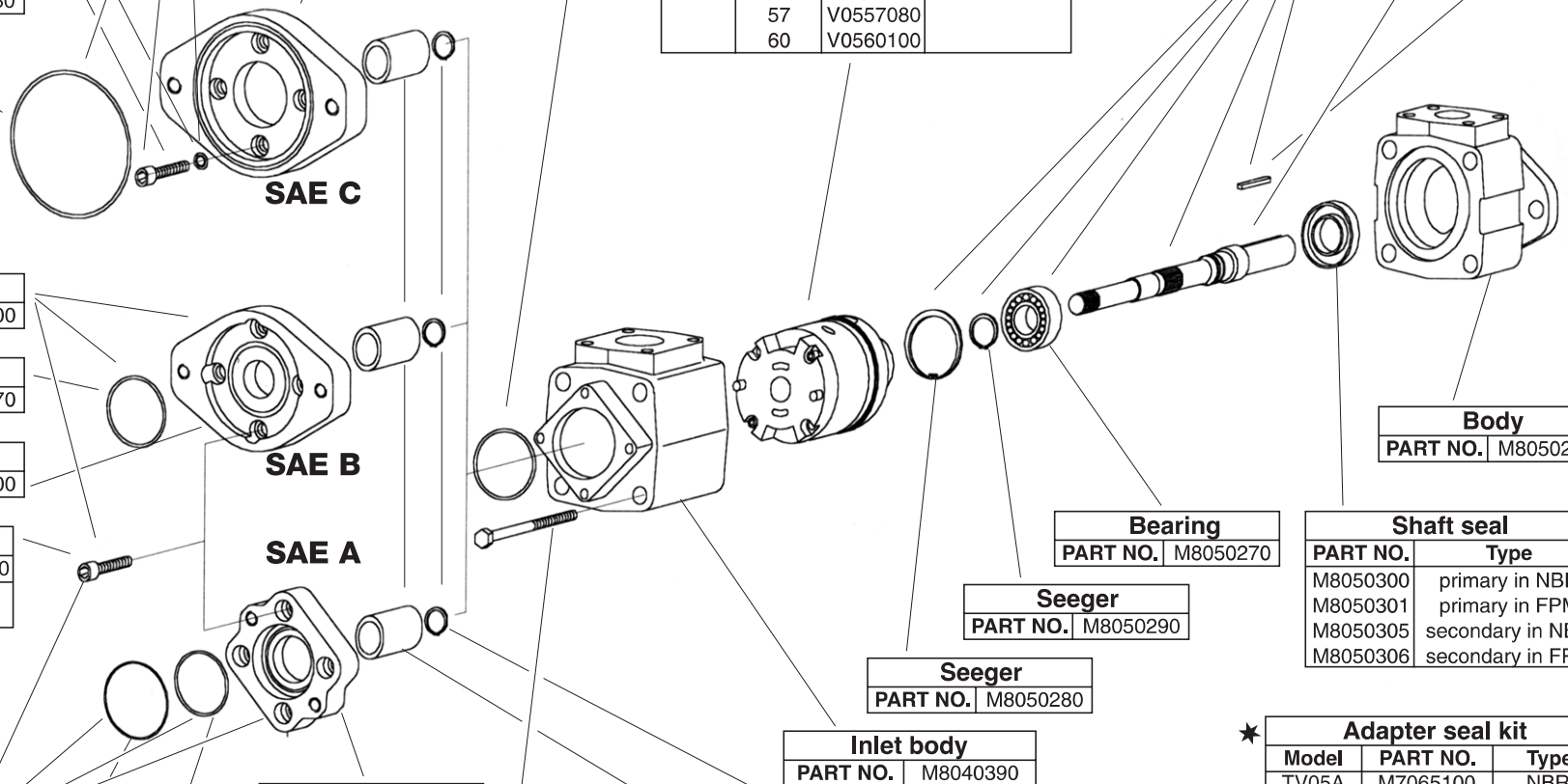

Washer	
PART NO.	M7061025

Adapter kit	
PART NO.	M7060300

Adapter plate	
PART NO.	M8060300

Screw	
PART NO.	M7061020
Torque at 70 Nm (624 lb. in.)	

✶ "O" ring	
PART NO.	M7061130

✶ "O" ring	
PART NO.	M7061050

Adapter kit	
PART NO.	M7060200

✶ "O" ring	
PART NO.	M7061070

Adapter plate	
PART NO.	M8060200

Screw	
PART NO.	M7061010
Torque at 70 Nm (624 lb. in.)	

Adapter kit	
PART NO.	M7060100

✶ "O" ring	
PART NO.	M7061110

✶ "O" ring	
PART NO.	M7061060

Adapter plate	
PART NO.	M8060100

Screw	
PART NO.	M8050320
Torque at 398 Nm (3550 lb. in.)	

Cartridge			
Series	Model	PART NO.	PUMP ROTAT.
V05	42	V0542010	right hand
	47	V0547030	
	50	V0550050	
	57	V0557070	
	60	V0560090	
V05	42	V0542020	left hand
	47	V0547040	
	50	V0550060	
	57	V0557080	
	60	V0560100	

Pump	Model	Kit	Shaft	Key
TV05A	203	M7051203	K0570203	M8058600
TV05A	297	M7051297	K0590297	-
TV05B	203	M7052203	K0571203	M8058600
TV05B	297	M7052297	K0591297	-
TV05C	203	M7053203	K0572203	M8058600
TV05C	297	M7053297	K0592297	-

Body	
PART NO.	M8050250

Bearing	
PART NO.	M8050270

Seeger	
PART NO.	M8050290

Seeger	
PART NO.	M8050280

Inlet body	
PART NO.	M8040390

Shaft seal	
PART NO.	Type
M8050300	primary in NBR
M8050301	primary in FPM
M8050305	secondary in NBR
M8050306	secondary in FPM

Model	Coupling	Seeger	Coupling kit (seeger+coupling)
TV05C	M7003500	M7061200	M7013500
TV05B	M7002500	M7061180	M7012500
TV05A	M7001000	M7061160	M7011000

✶

Adapter seal kit		
Model	PART NO.	Type
TV05A	M7065100	NBR
TV05B	M7065200	NBR
TV05C	M7065300	NBR
TV05A	M7065150	FPM
TV05B	M7065250	FPM
TV05C	M7065350	FPM

For "Pump seal kit" part no. refer to BV Series technical catalogue

Operating instructions

Maximum speed: the maximum speeds given in this catalogue are valid for an atmospheric pressure of 1 bar (14.7 psi) and with ambient temperature in the range of +30°C to +50°C. Higher speeds than those given cause a reduction in the volumetric efficiency, due to cavitation phenomena in the inlet area inside the pump. Sustained excess speed causes a rapid deterioration of the internal components reducing the lifetime of the cartridge.

Minimum speed: In general, the min. speed for all pumps is 600 rpm. However, it is possible to operate at lower speeds with certain pump configurations and with appropriate operating temperatures.

Inlet pressure: the inlet pressure, measured at the inlet port, should remain within the prescribed limits. Note that pressures lower than minimum limit cause cavitation and pressures above the maximum limit cause abnormal loads on the shaft and the bearings. In both cases this causes a significant reduction in the lifetime of the cartridge.

Maximum outlet pressure: the maximum outlet pressure is different for each type of fluid used as can be seen from the corresponding diagrams. With optimal temperature and filtration conditions a pressure peak of +10% is permissible for a maximum time of 0.5 sec.

Mounting and drive connections: consider the following indications when preparing the installation drawings for the system:
- the pump is designed to operate with keyed shaft coupled axially and by means of a flexible coupling to the drive;
- the clearance between the keyed shaft and the corresponding sleeve coupling has to be between 0.004 and 0.030 mm;
- avoid axial and radial loads on the shaft;
- the mounting flange has to be perpendicular to the drive shaft, with a maximum error of 0.18 mm every 100 mm;
- when mounting onto a gearbox, or other component without a flexible coupling, it is advisable to order pumps with splined shaft. In this case the clearance between splines has to be between 0.013 and 0.051 mm on the pitch diameter.
- The clearence between splines, of the pump installed on the rear mounting side has to be between 0,015 and 0,065 mm on the pitch diameter.

Hydraulic circuit: always install a pressure relief valve on the supply line to prevent the pressure from exceeding the allowed maximum. Normally, it is set in accordance with the weakest component in the system. (In the case where it is the pump, set the valve to a pressure 15% higher than the maximum pressure rating of the pump.)
Inlet line tubing should have a section equal to or greater than that of the inlet port of the pump. It is advisable to keep the tube connecting the pump to the reservoir as short possible. Particular care has to be taken with the inlet line which has to be hermetically sealed to avoid entraining air into the circuit; this varies the characteristics of the hydraulic fluid causing the operating parts to become damaged.

Filtration: the inlet line filter must have a flow rate capacity that is higher than that of the pump at its maximum operating speed. The filtration requirements for individual models are given in this catalogue. The use of a filter by-pass is recommended for cold starts and should the filter become clogged. Proper maintenance of the filter element is essential for the correct operation of the entire system. In normal conditions replace the filter element after the first 50 hours of operation. Subsequently, replace it at least every 500 hours. Regarding the filter on the return line, the same general conditions apply as for the inlet line and it should be positioned in an accessible location for ease of maintenance.

Tank: if possible, the reservoir should be positioned above the pump. Otherwise, ensure that the minimum level of the fluid contained in it is higher than the pump inlet line opening. It is important to avoid draining the inlet line with the pump at standstill. The opening of the return line into the reservoir must remain below the minimum level of the fluid in the reservoir. It must not be positioned too close to the opening of the inlet line to avoid the possibility of any air bubbles passing into the inlet line. Baffles inside the reservoir may be useful in avoiding the problem. Rapid temperature changes can cause condensation on the underside of the lid of the reservoir with the formation of droplets of water that can fall into the oil. To avoid this problem it is recommended that the lid should have small vents so that the air space in the reservoir is ventilated. The vents have to be screened, though, to prevent the entry of dust or the sudden expulsion of fluid.

Start-up: use the following procedure when the pump is started-up for the first time:
completely fill the pump and the inlet line with fluid;
start the engine for approximately one second a number of times at regular intervals of approximately 2 or 3 seconds until the noise level reduces, thereby confirming that it has been primed;
with a manometer check to ensure that the outlet pressure increases slightly;
once the pump has been primed, maintain low pressure levels activating all parts of the circuit a number of times until air bubbles disappear completely from the return line to the reservoir.
This procedure should be carefully as any residual air inside the pump can quickly cause the rotor to seize.

Cold starting: when starting the pump, especially with low ambient temperatures, operate with moderate speed and pressure until the average temperature in the entire circuit is within the given limits.

The information provided in this catalogue is subject to change without notice

© 2008 B&C

B & C s.r.l.
41122 Modena (Italy) - Via Somalia, 20/22
tel.+39 059450666—fax +39 059450686
www.bcit.it - info@bcit.it

CT TQ rev1E