FLUCOM ITALY

DIRECTIONAL CONTROL TWO WAY CHECK VALVES

GUIDED POPPET–TYPE

CAE 50/..

05.070

01.07

Technical features

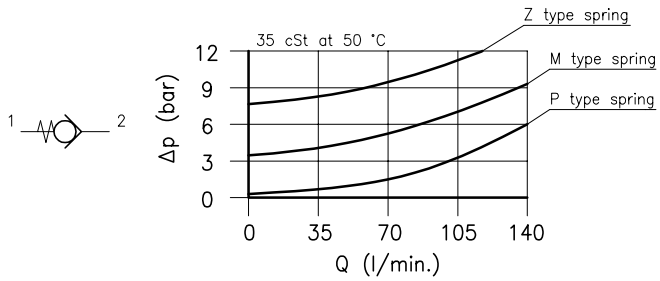

Cavity (For dimensions see catalogue 17.000)		S 50/2
Nominal flow	(l/min.)	135
Max. pressure	(bar)	420
Cracking pressure	(bar)	0.35–3.5–8
Fluid viscosity range	(cSt)	2.8 – 380
Fluid temperature range	(°C)	–20 +80
Mass	(kg)	0.230
Hydraulic fluid; mineral oil HM and HV ISO 6074		
Recommended filtration; 19/15 ISO 4466 (25 μ absolutes)		
Standard seals in Polyurethane and Buna N		

Dimensions

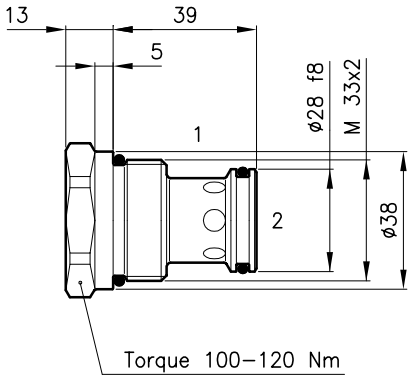

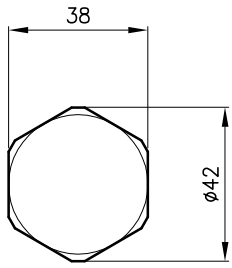

Ordering informations

CAE 50/P

CAE 50 = Valve type

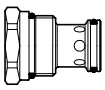

Standard springs

P = 0.35 bar

M = 3.5 bar

Z = 8 bar

Codes:

CAE 50/P	52 011 100
CAE 50/M	52 011 101
CAE 50/Z	52 011 116
External seals kit	90 620 106

CAE 50 valves can be assembled on standard bodies 50–LO series; for dimensions see catalogue 16.010